User Manual

NEXIA-SY Take-out Robot

- NEXIA-V-100SY
- NEXIA-V-200SY
- NEXIA-V-400SY
- NEXIA-V-600SY
- NEXIA-V-800SY
- NEXIA-V-1300SY
- NEXIA-V-2000SY
- NEXIA-V-2500SY
- NEXIA-V-3000SY

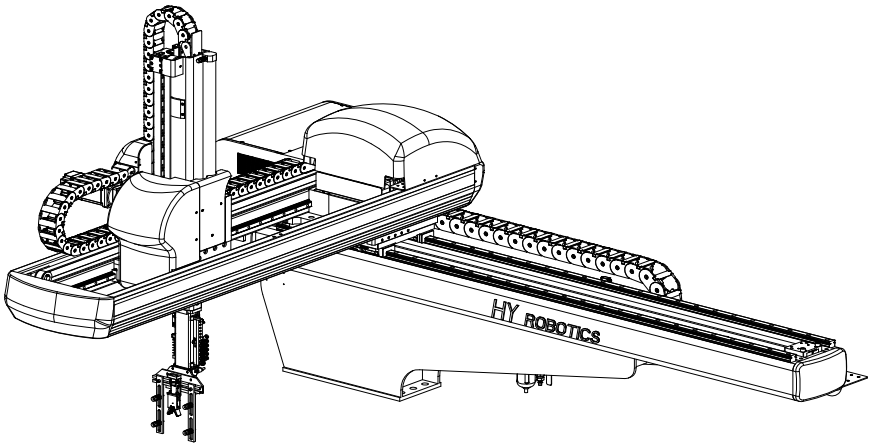

Read this manual completely prior to installing, operating or performing maintenance on this equipment

HY ROBOTICS

Selling, Installing and Using the Product not in Manufacturing Country

- When the products and any parts of the products is to be taken foreign country after delivery to the original purchaser, the purchaser should obtain legal permission to export the products according the laws in both exporting and importing country. HY Robotics Co,. Ltd. will not have any responsibility whatsoever if seller, purchaser and user exports the products without following the requirement procedure.

Disclaimers

- Every effort was made to ensure that the information in this manual was complete and accurate at the time of printing. However the content and any information in this manual is subject to change without notice.
- HY Robotics Co,. Ltd. assume no responsibility for any errors or omissions in this document
- Any recommendation about manual amendment is always welcomed.
- The content include in this manual is intended to serve as reference data concerning the machine in this manual. HY Robotics Co. Ltd is not legally bound in any way whatsoever by these data.
- HY Robotics Co,. Ltd. assumes no responsibility whatsoever for damage or lost profits resulting from modification, disassembly, misuse, inadequate installation environment, or any other situation beyond our control.
- HY Robotics Co,. Ltd assumes no responsibility whatsoever for damage or lost profits resulting from the use of this equipment.
- The information contained herein is the property of HY Robotics Co., Ltd. and shall not be reproduced in whole or in part without prior written approval of HY Robotics Co., Ltd.

NEXIA-SY User Manual
Ver 1.0

Attention Marks

Danger, Warning, Caution, Notice

This document use following attention mark for the safety of operation

⚠DANGER	If the actions indicated in a “ DANGER” are not compiled with, death or serious damage of major equipment could results.
⚠WARNING	If the actions indicated in a “ WARNING” are not compiled with, serious injury or major equipment damage could results.
⚠CAUTION	If the actions indicated in a “ CAUTION” are not compiled with, some injury or damage could results.

NOTICE	A “ NOTICE “ provides supplementary information, emphasized a point or procedure, or gives a tip for easier operation.

OPERATIONAL WARNINGS

DANGER

- The robot must be installed in a safe and secure method by professionals familiar with the structural engineering principles related to the installation of large industrial equipment. The information on the following pages can be used as a guide to help you install your robot. The customer must have the installation plan for the selected site verified to be adequate by a structural engineer or a similarly qualified professional. HY Robotics Co.Ltd can not accept any responsibility for damage due to improper installation

- The robot motion area is as follows, this area is the dangerous area of the robot. Be sure to operate the robot outside the safety fence. If you enter the robot motion area during Operation, a serious accident could result.

WANRING

- Do not enter robot motion area or inside the safety guard during robot operation. Do not touch or do not allow other objects interfere with the safety fence.

- Do not remove or open safety guard during robot operation. Do not operate robot inside of the safety guard .

- Do not place any cups or bottle that containing water or liquid on the top of robot or controller. It may cause of electric shock.

- Do not place any small metal (Clip, Screw, Tool, etc) on the robot body and control box. If such a piece of metals get in to the inside of robot body or controller, a electric short may occur and cause of fire.

- Do not place any heavy obstacle or object on the robot body and controller. It may damage the robot surface as well as deform the structure of robot and it may fall directly to the person.

- Do not use an extremely flammable spray near by the robot. It may cause a fire.

- If any air leakage is detected from robot , stop immediately the robot or activate E-Stop function. Lock out and Tag out until the problem fixed.
- When an error occur during operation, stop the robot immediately, find the cause of error and follow the step to re-start robot.

- Make sure following before turn on the power of robot
  - Confirm there in no person in the motion area of robot
  - Confirm the location of handy controller and tool is required place
  - Confirm there is no obstacle on the robot and in the area of robot motion

WANRING

- If any of the following cases should occur, stop the operation with E-Stop button immediately and turn off the power. If you continue the operation of machine under such conditions, a fire may result in the worst case.
  - When fume rises from the robot body or control box, or the outside surface of the robot emits abnormal heat.
  - When there is any abnormal noise from the robot.
  - When any water, or foreign obstacle is inside of the robot

- Stop the robot immediately when abnormal symptom happens during operation. When an error occurs during operation, the robot stops and alarm sounds and the error code displays on the handy controller. Press Stop button to silence the alarm. Check error table for a description of the error.

CAUTION

- If the following items are contained to the air, do not use it. Use only clean air.
  - Acid
  - Organic solvents
  - Chlorine gas
  - Sulfur dioxide
  - Compressor oil

- Do not drop or give any strong shock the the handy controller. It may be cause of malfunction. Handle with care with Teach palm handy controller

- Handle with care with pneumatic line. It may be cause of leaks.

- Make sure the operation environment (Motion area, Safety Guard) should be proper for operation of machine equipments.

- Operate the robot with only healthy , good and normal body and mental condition.

- Do not use handy teach palm pendant (Controller) which contact with water or oil

- Make sure the operating environment is as follows
  Operation Temperature : 0℃ ~+ 40℃ (32°F ~+ 104°F)
  Storage Temperature : -25℃ ~+ 55℃ (-13°F ~ + 131°F)
  Humidity : 35 % RH ~85 % RH (without condensation).

CAUTION

- When setting up the robot arm in the mold area by manual operation, take really care that the robot arm does not contact with the mold or tie bar. Make sure to operate the robot outside the safety guard.

- Do not use an operation fluid other than clean compressed air

- Regulate the air pressure as specified.

- If don't operate the robot for several days or long period of the time due to plant shutoff or vacation, Turn OFF the control power.

- Proper working clothes, helmet and protective shoes required for operating and setting up the robot (Personal protective Equipment)
  - Do not operator robot without safety helmet or shoes.
  - Do not wear necktie and necklace, bracelet etc

MAINTENANCE WARNINGS

WARNING

- Before cleaning, inspecting, repairing, adjusting, or performing maintenance on the take-out, be sure to turn OFF the control power and pull out the plug and follow Lock out / Tagout Procedure. If you attempt to perform the cleaning without turning OFF the control power, electric shock. may happen.

- Only a qualified person is allowed to open the cover or panel of the take-out robot.

- Assign one qualified person who will control safety of the robot. and need to be trained by the manufacturing company or agency how to control robot and about safety

- Be sure to release pneumatic pressure before replacing a filter bowl.

- Before handling ROM, turn off the control power. Use ROM Remover to pull the ROM out. Do not drop the ROM and expose it to strong shock.

POWER RELATED WARNINGS

WARNING

- Handle with care with power cable, do not pull and bend. Do not place heavy object on the cable (No folk lift passing on the power cable). Use cable tie to organize power cable for safety. (Damaged cable could be the cause of fire or electric shock.

- Using unspecified Extension cable cause abnormal symptoms including heat and fire.

- Only qualified personal should try to install Electrical power and ground to the robot.

- Connect the earth terminal of the plug to the earth terminal of the plug socket

WARNING

- Power off when connect or disconnect any connector of robot

- Lockout / Tagout before opening the control box

- Connect the earth terminal of the plug to a class D grounding terminal

Safety Signs

There are safety signs on the robot like below figures. Respect and follow the messages on these signs when operating or performing maintenance on the robot. Do not peel off these labels or signs

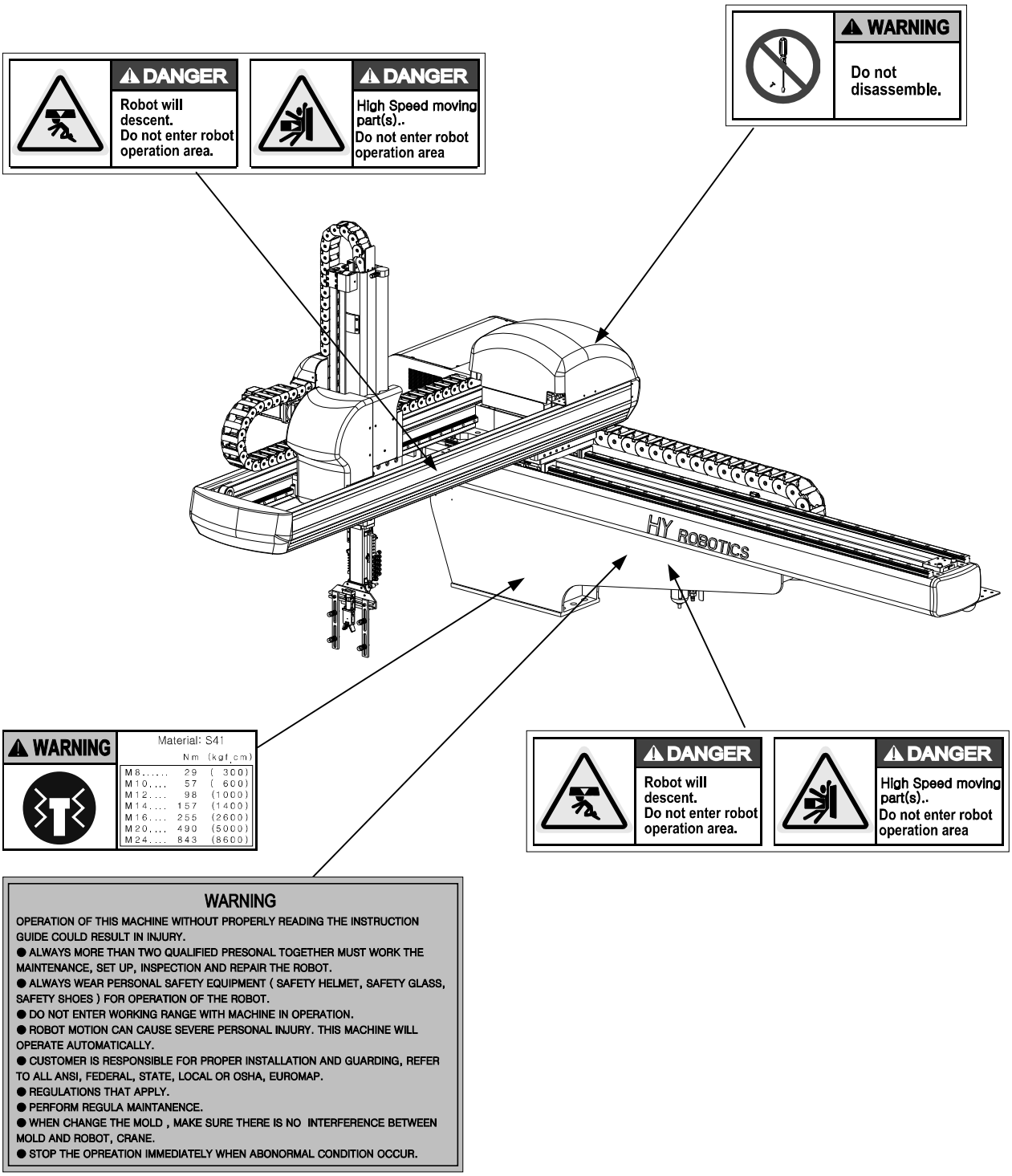

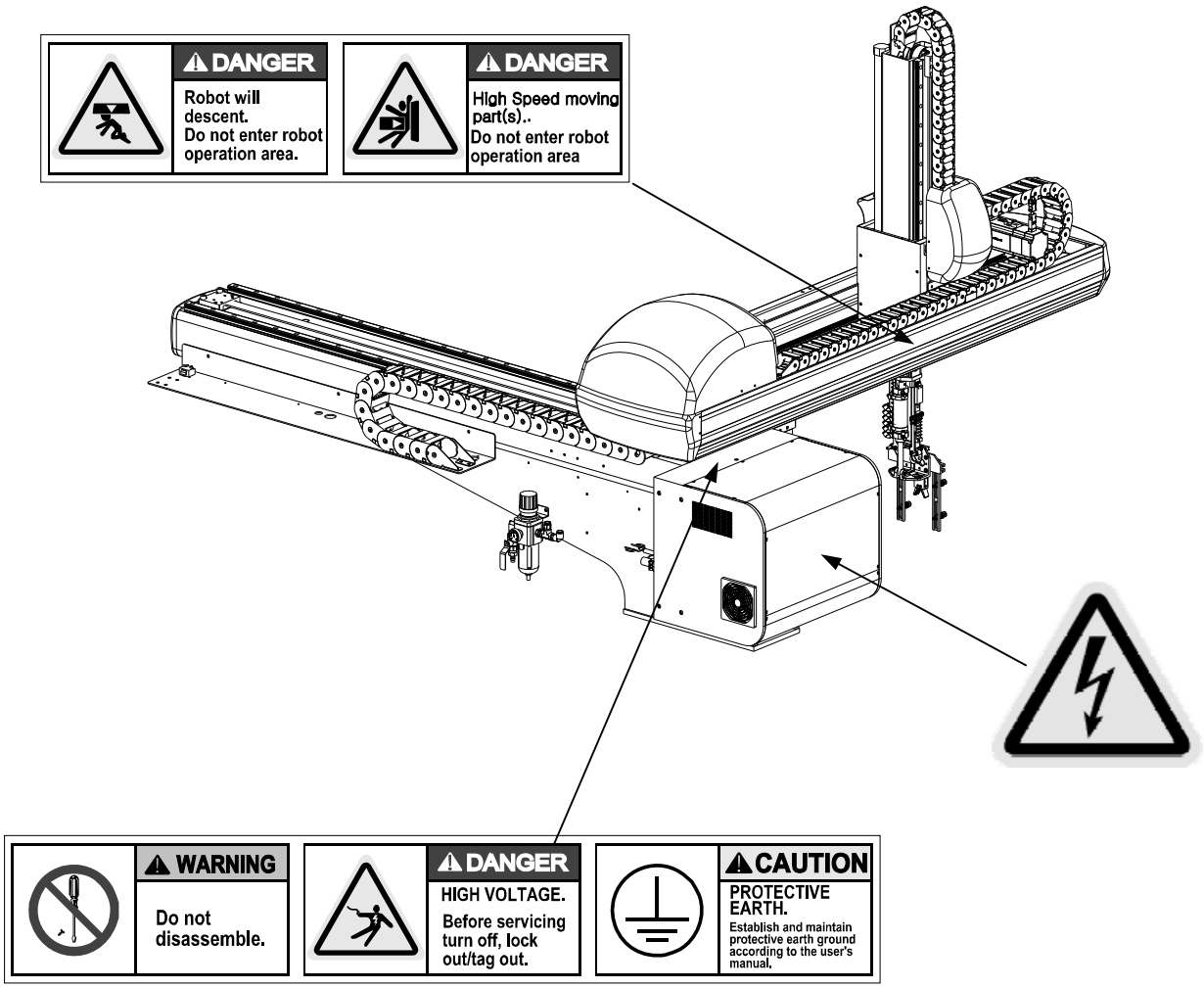
DANGER
Robot will descent.
Do not enter robot operation area.
DANGER
High Speed moving part(s)..
Do not enter robot operation area
WARNING
Do not disassemble.
DANGER
HIGH VOLTAGE.
Before servicing turn off, lock out/tag out.
CAUTION
PROTECTIVE EARTH.
Establish and maintain protective earth ground according to the user's manual.

CONTENTS

1.Introduction

1.1 Robot Assembly

This Robot is consisted of

- Robot Body
- Interlock and Control Box
- Handy Controller

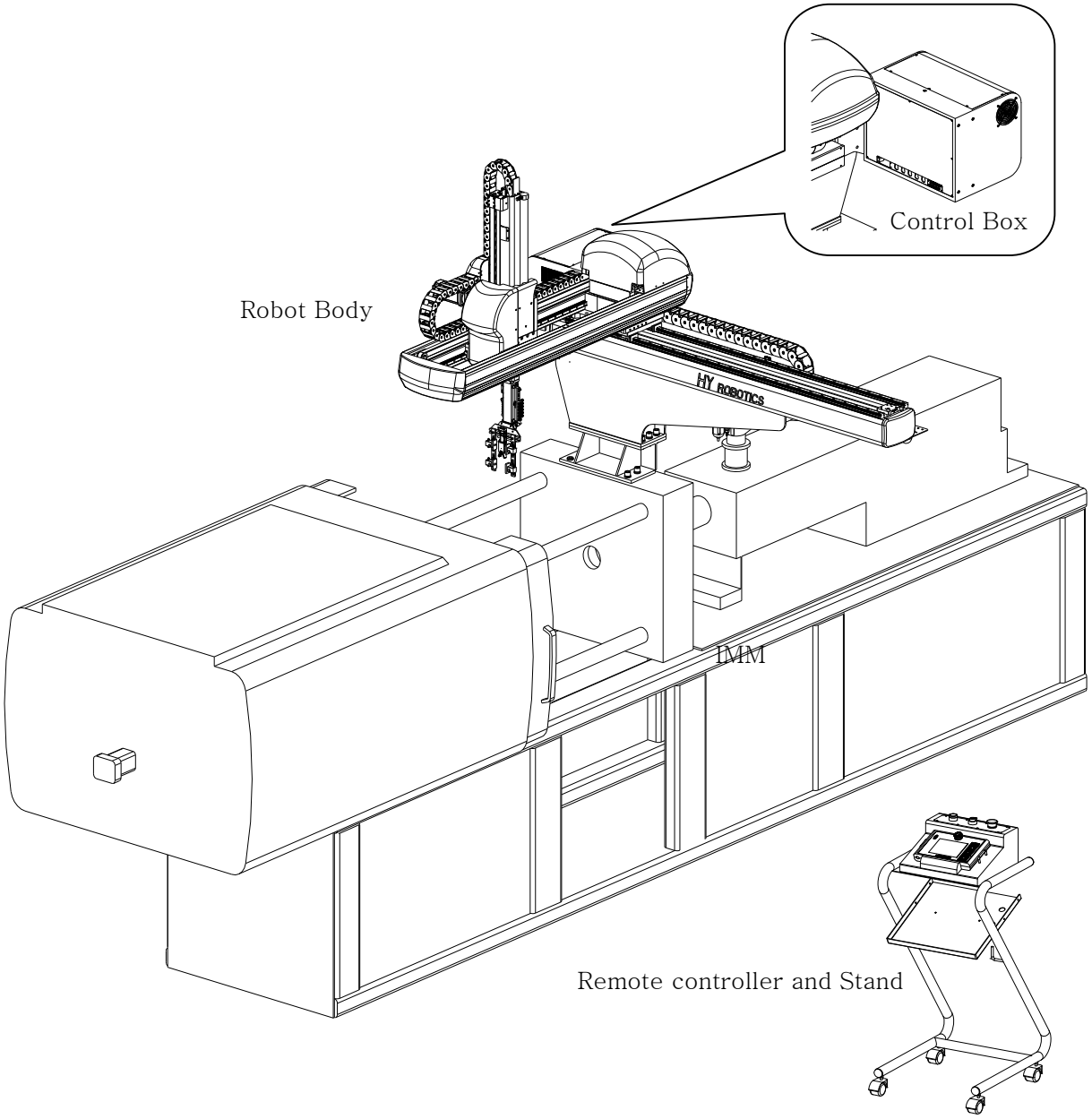

1.2 Robot Body

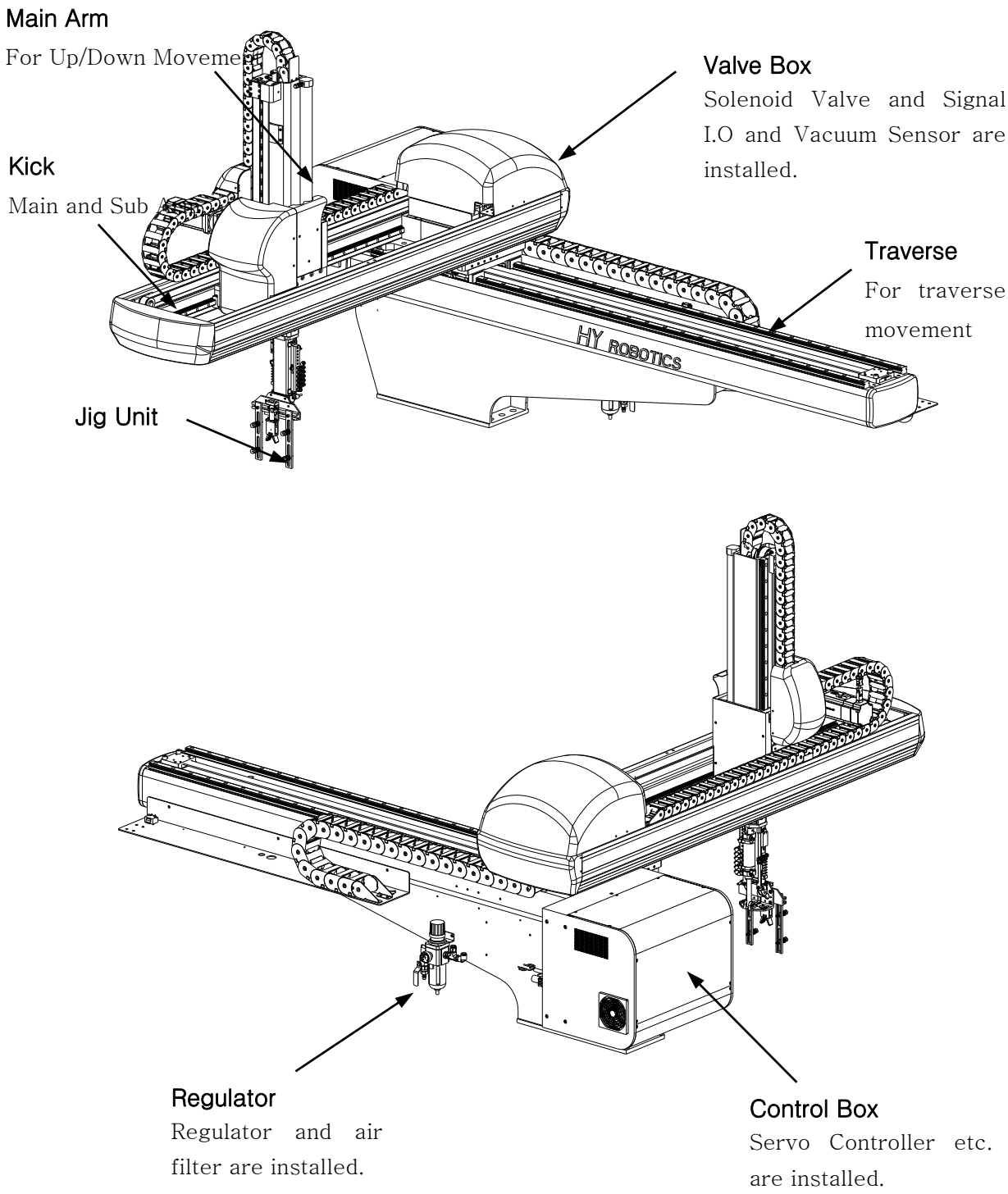

1.3 Remote Controller and Stand

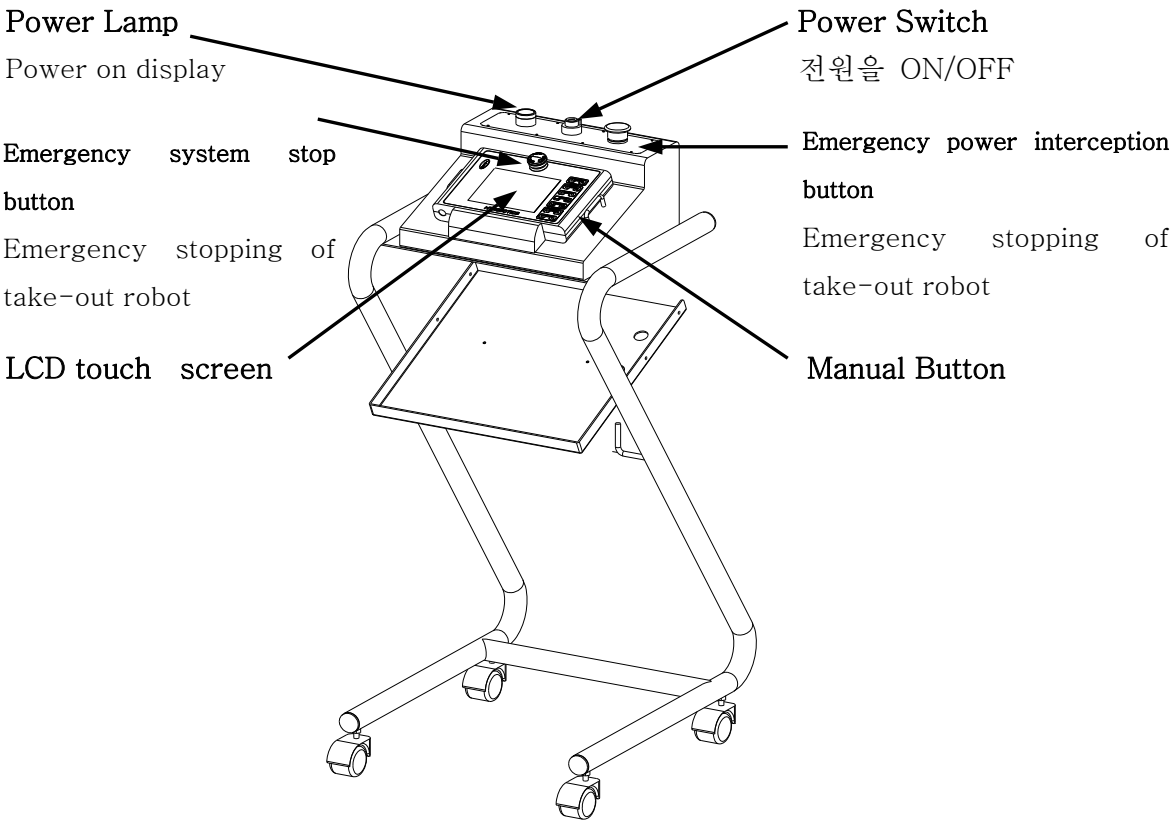

Manual Button

Pressing each relevant button moves each axis privately.

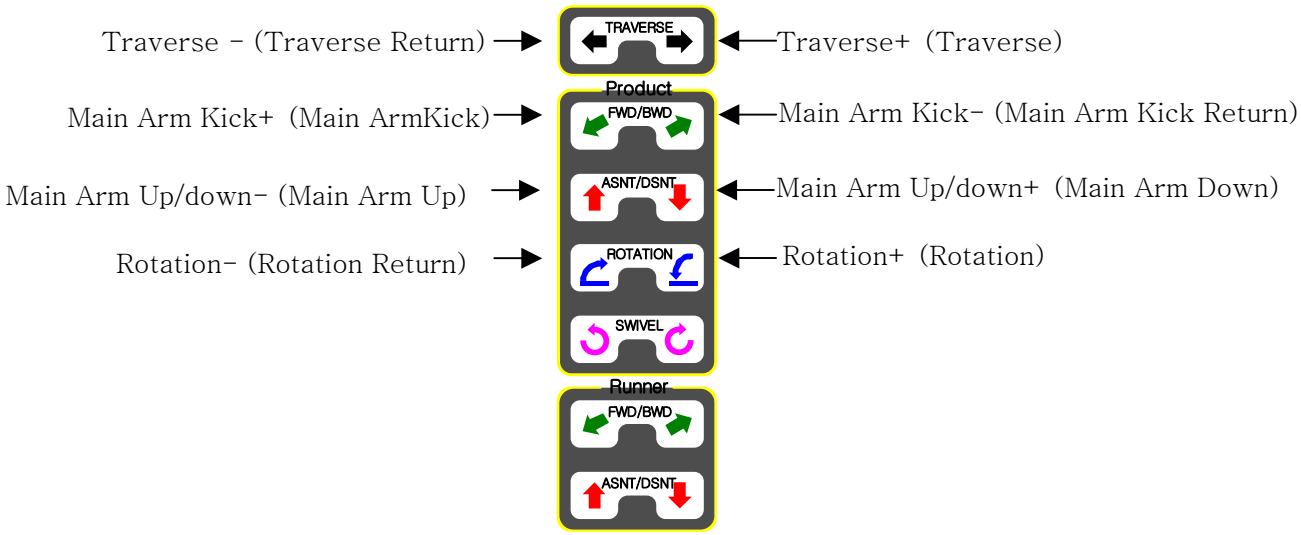

1.4 Each Axis

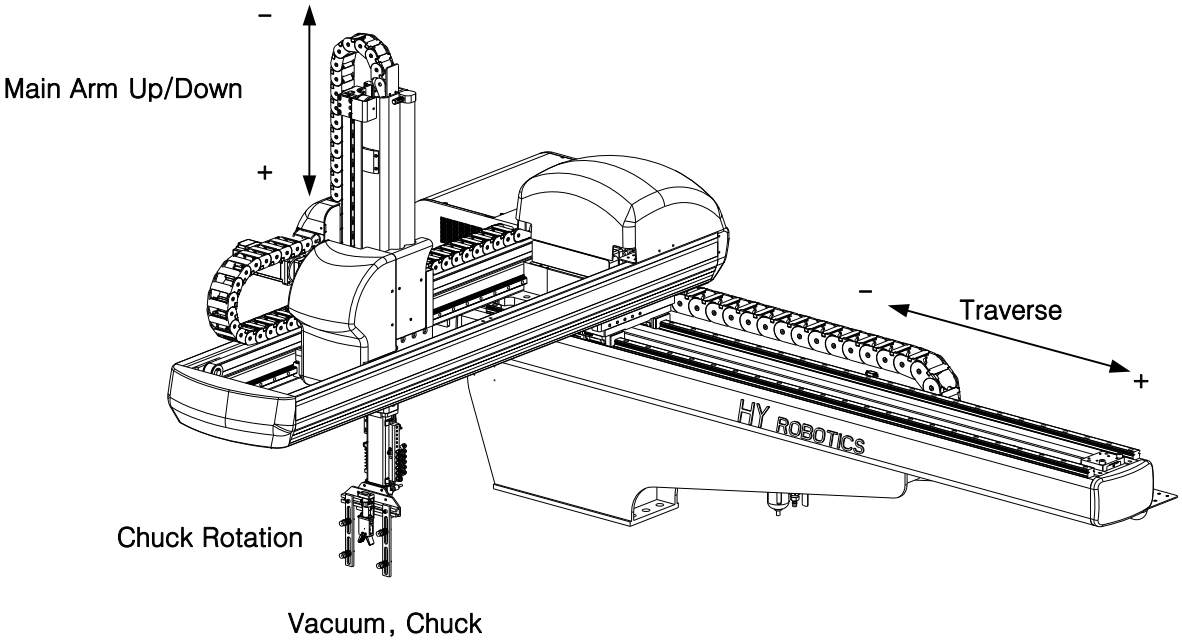
-
Main Arm Up/Down
+
-
Traverse
+
HY ROBOTICS
Chuck Rotation
Vacuum, Chuck

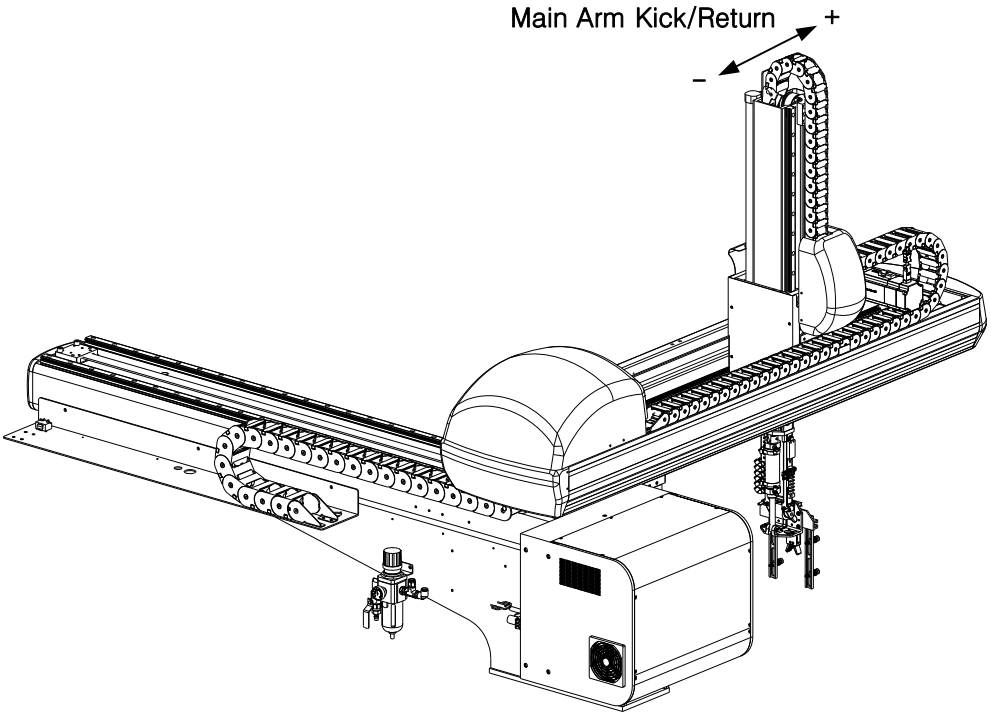
Main Arm Kick/Return
+
-

2.Before Operation

2.1 Before Operation

2.1.1 Air regulator

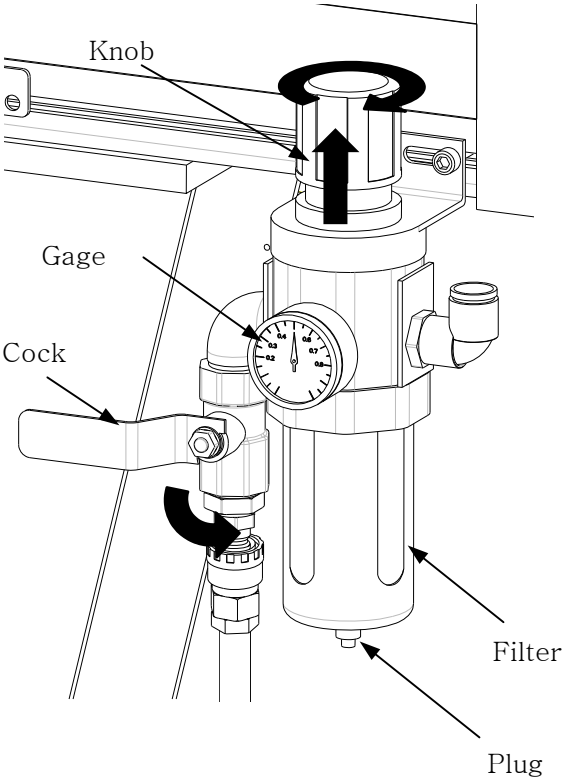

Make sure the robot arm is retracted
Beware that the robot may move suddenly as the system is pressurized.

2. Turn Cock counterclockwise

3. Pull Up the adjusting knob and adjust the pressure to [5.9×10^5 Pa(Gauge) or 6 kg/cm^2] and Push down to set

* Remove water from air regulator regularly if required.

2.1.2 Vacuum Verification Sensor Adjustment

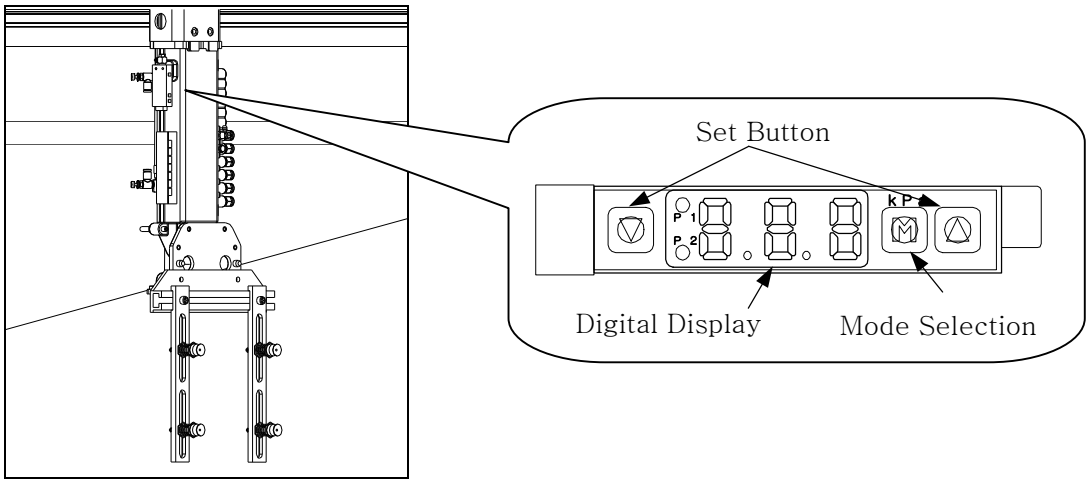

[Main Arm Up/Down]

Vacuum Sensitivity Adjustment (Normally not required)

- **STEP 1**

Press [M] and [△] at the same time
P1 will blink.

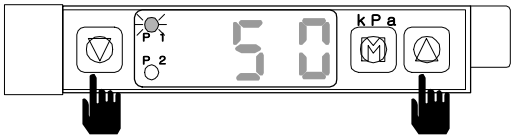

- **STEP 2**

Press [▽] or [△] , set pressure -60(kpa) .

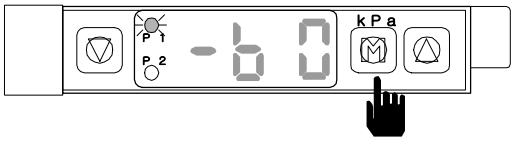

- **STEP 3**

Press [M] more than 1 seconds.
Set up finished, and LED will display current Vacuum pressure.

Lock and Unlock for Vacuum Sensor value

Locking Vacuum Sensor Value will prevent setup value from changing by any mistake

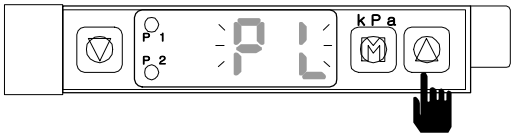

Press [△] more than 3 seconds. “PL” will blink twice and Sensor will lock.

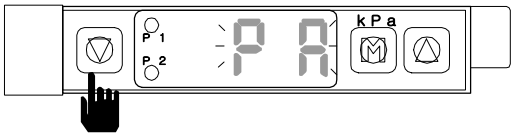

Press [▽] more than 3 seconds “PA” will blink twice and sensor will unlock.

2.2 Before Starting (Preventative Maintenance Schedule)

Before you start daily operation of the robot, perform preventive maintenance.

- Daily

- Check air Pressure is 5~6.5 kg/cm^2 or 5 ~ 7 × 10^5 Pa(Gauge)]
- Inspecting filter regulator unit : Check the bowl for water and contamination and for correct pressure.
- Check Hoses and Cables : Check for kinks, cuts and tears. Replace as needed.
- Inspecting Shock absorbers and cushions. : Make sure the are operating smoothly
- Checking Gripper return spring : Check that the gripper return spring is operating properly
- Checking residue buildup: Inspect the shafts and gripper for buildup of plastic residue. Clean as necessary.
- Checking Interlock functions. : Make sure the interlock functions are working properly.
- Checking part verification: Check that the parts verification is working properly.
- Check Suction cups

- Weekly or as often as needed.

- Check EOAT mounting screw including gripper : Check EOAT screw for tightness . Tighten as required.
- Inspecting fittings and mounting hardware : Check all fittings, screws, and component mounting hardware for tightness. Tighten as needed.
- Check the safety latch cylinder for Down. : Make sure the safety latch cylinder is working properly
- Testing the Emergency Stop Button. : Verify that the emergency stop works properly.

- Monthly

- Inspecting the filter regulator : Check that the filter regulator is set at the correct pressure. Check the filter and clean or replace it as needed.
- Checking the solenoid valves : Check that the solenoid Valves are working properly. Replace as needed.
- Checking all electrical cables : Inspect all electrical cables for cuts, burns and replace as required
- Checking the exhaust filter.
- Inspecting electrical terminal : Check all electrical terminals for tightness, adjust as required.

- Inspect each axis cylinder, make sure operation and the cushion is working properly
- Inspect body for any damage during mold set up or other operation

3.START UP / STOP

3.1STEP FOR START-UP

Follow step for Auto Operation

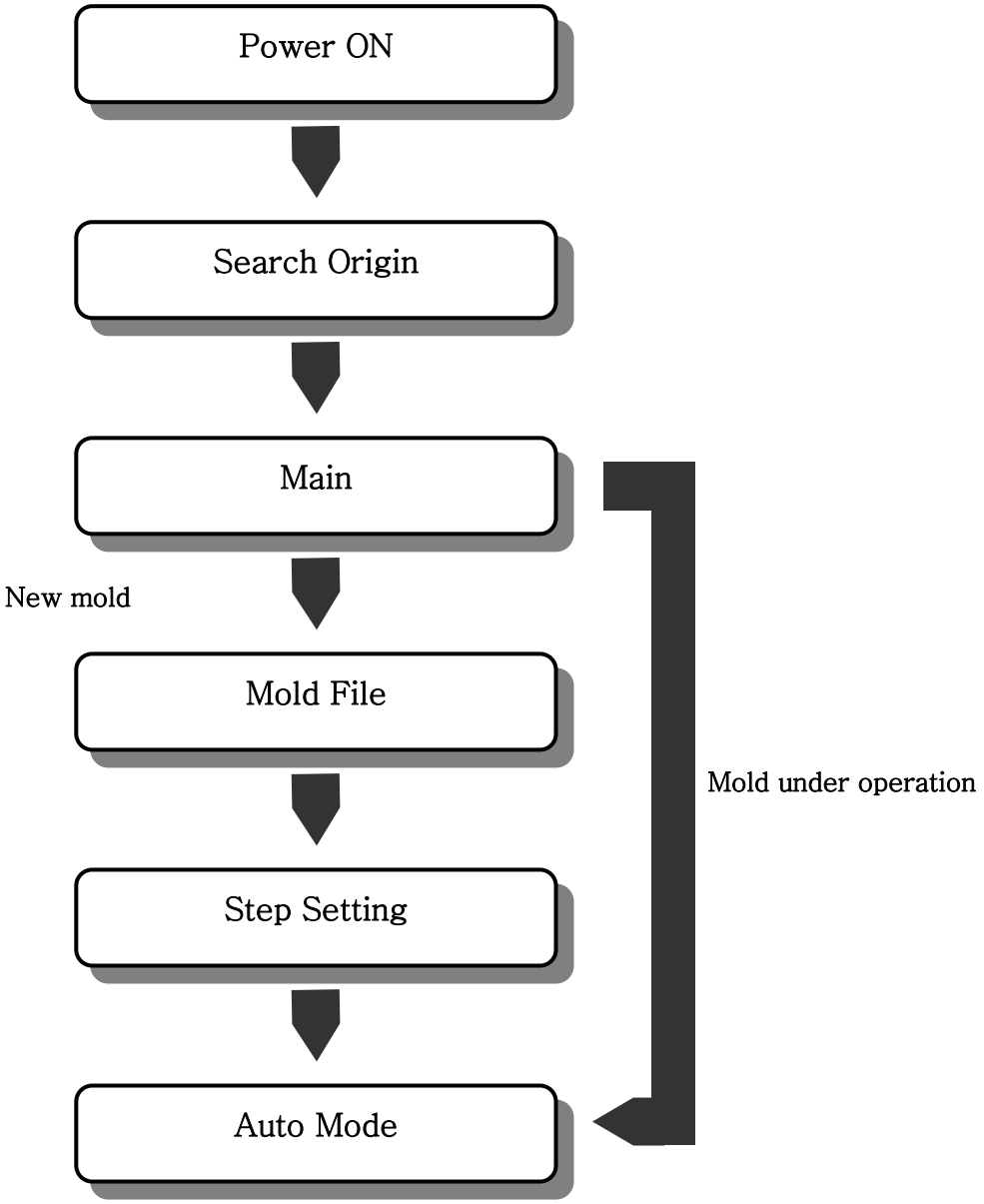

3.1 Start Up

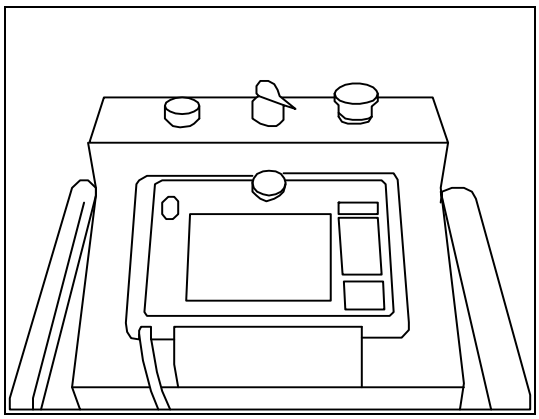

- **STEP 1**

Turn On Power..

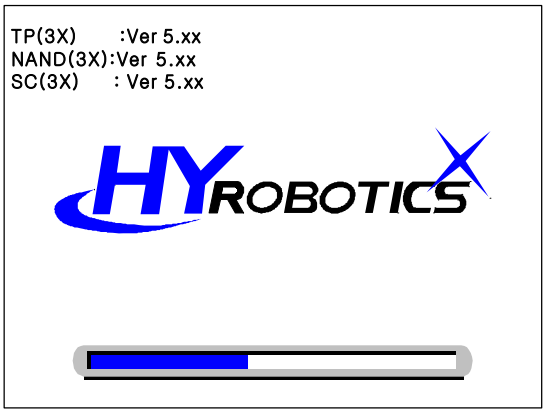

- **STEP 2**

It will display System Version. And move to origin screen.

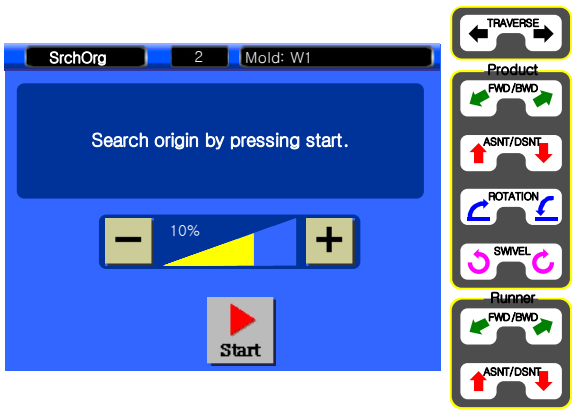

- **STEP 3**

Press  for origin point of robot motion.

⚠DANGER	Before move to Origin, make sure the robot arm is in safe location. If robot arm is not if safe location, move robot arm manually to safe location with manual button.

● STEP 4

In case origin searching is completed, move to Main screen.

(Press  and Robot stop)

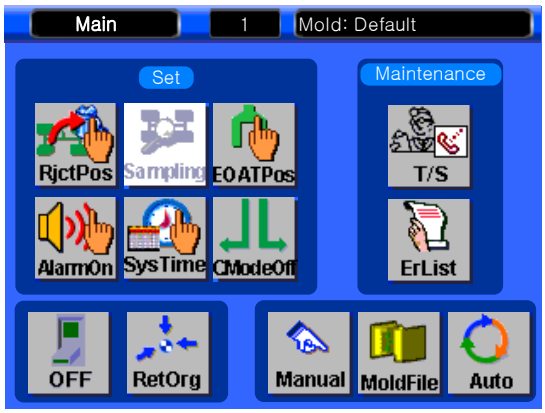

● STEP 5

(In case there is mold operated before)

Press  and move to Auto Mode Screen.

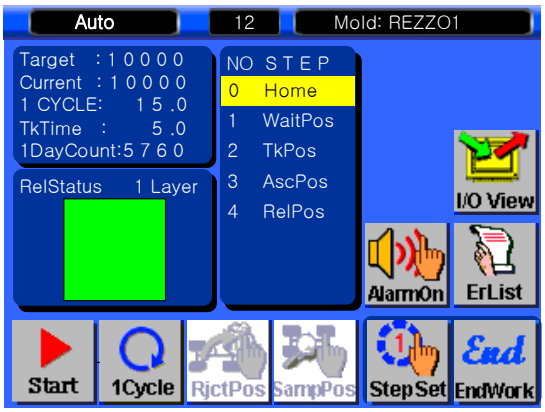

● STEP 6

Press  and start Auto Operation

3.2 Stop Operation

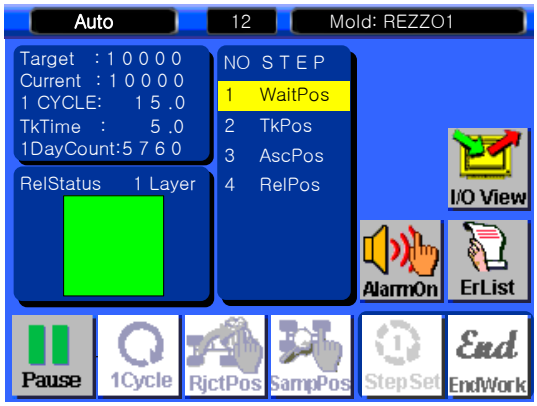

- **STEP 1**

In order to stop Automatic operation before completing object quantity, press  .

When the step under progress is completed, robot stops temporarily

 is switched to  .

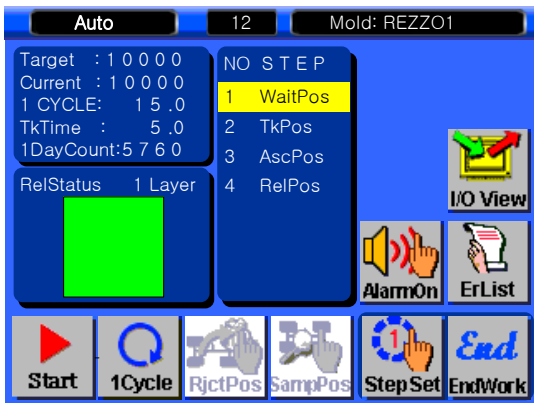

- **STEP 2**

Press  and move to Main Screen.

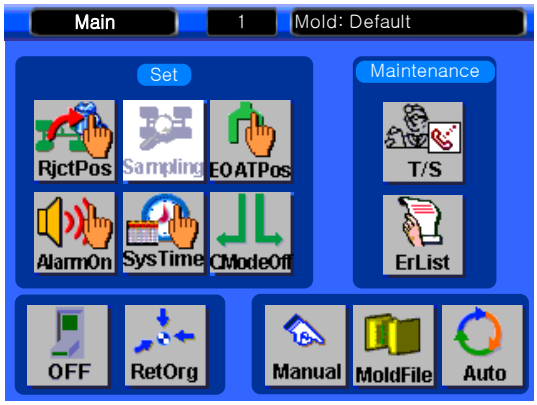

- **STEP 3**

In order to turn off servo drive, press  .

⚠ WARNING Turn Off Handy Controller, Power off Molding Machine.

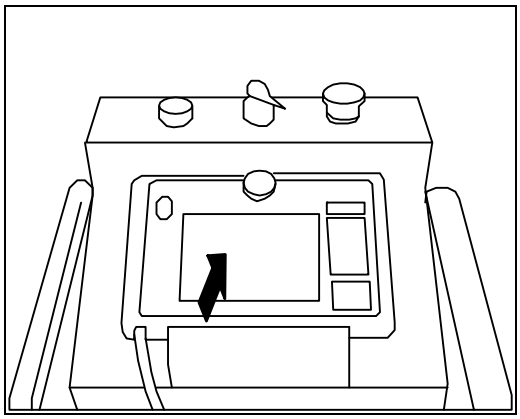

- **STEP 4**

Turn Off Power.

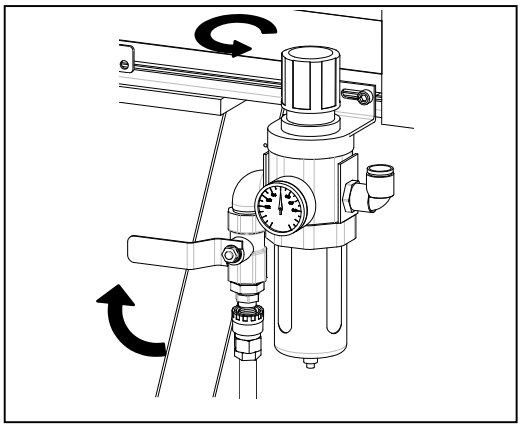

- **STEP 5**

Disconnect Air Pressure.

3.4 Emergency Stop (EMO Stop)

Press EMO button in any dangerous situation (Protect People, Robot, Mold Etc)

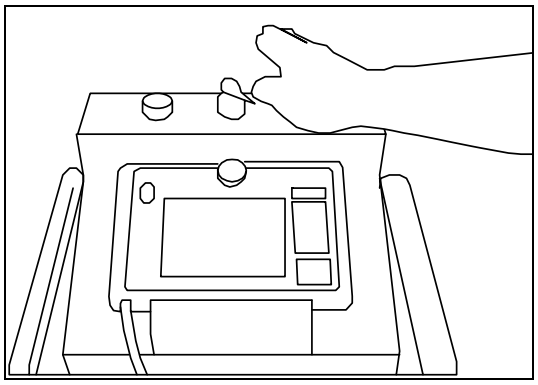

[Emergency power interception button]

- **STEP 1**

In case emergency power interception button is pressed, power of robot is turned off to stop.

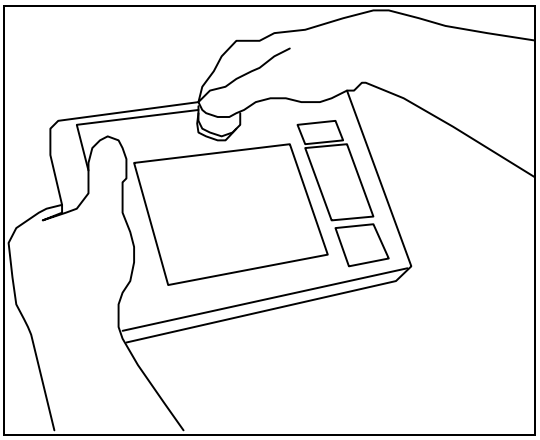

[Emergency system stop button]

In case emergency system stop button is pressed, system power(servo driver) is turned off to stop.

Simultaneously, error message window appears on remote controller.

3.5 Restoring Emergency Stop

⚠ WARNING Eliminate Emergency Environment before restoring ROBOT EMO button.

[Emergency power interception button]

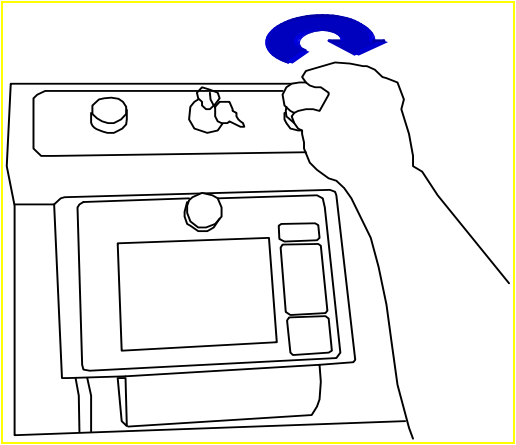

- **STEP 1**

Turn Off Power

- **STEP 2**

Cancel it by turning emergency power interception button in clockwise.

- **STEP 3**

Turn on after shutdown 10~15 seconds

- **STEP 4**

After moving robot to safe place using manual button, return to origin point by pressing  .

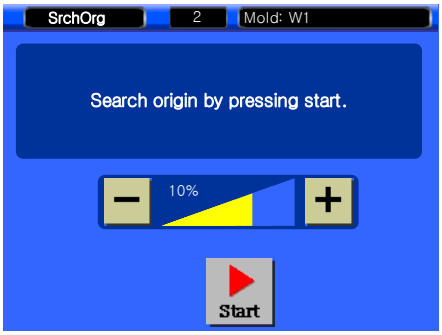

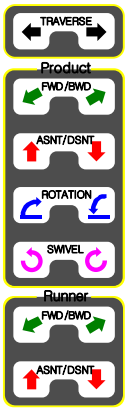

[Emergency system stop button]

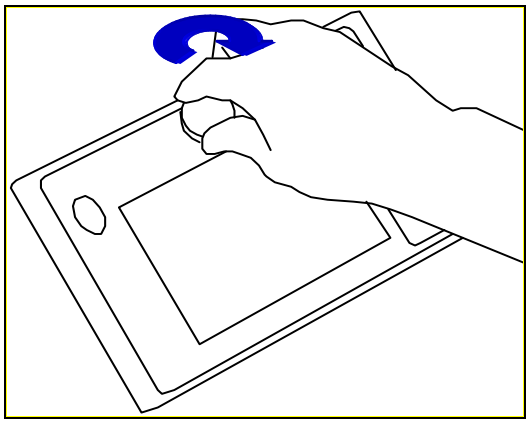

- **STEP 1**

Eliminate Emergency Stop Situation.

Rotate ROBOT EMO button to Clock Wise

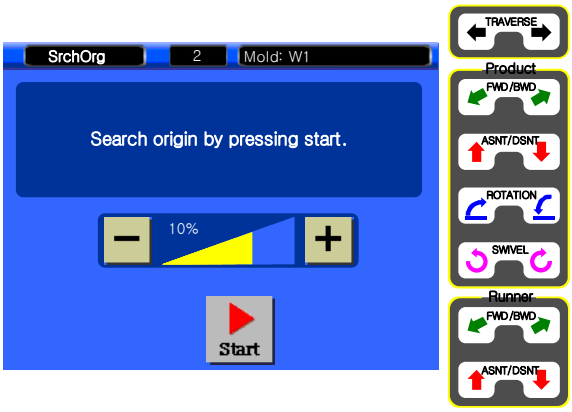

- **STEP 2**

After moving robot to safe place using manual button, return to origin point by pressing 

.

4.OPERATION

4.1 Screen Structure

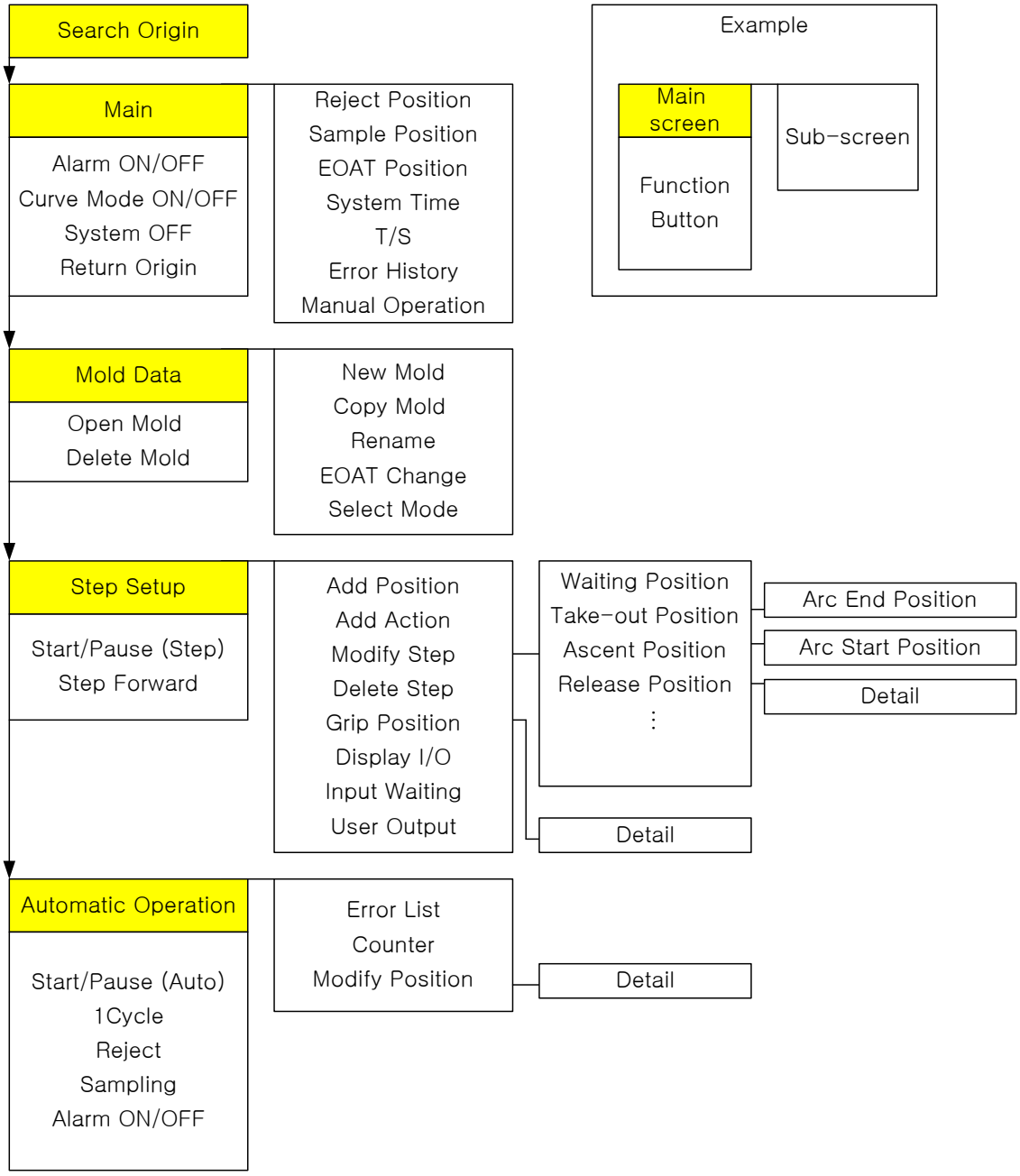

4.2 Description of Remote controller screen

Mold number

The mold number registered during teaching is displayed.

Mold name

The mold name registered during teaching is displayed.

Screen name

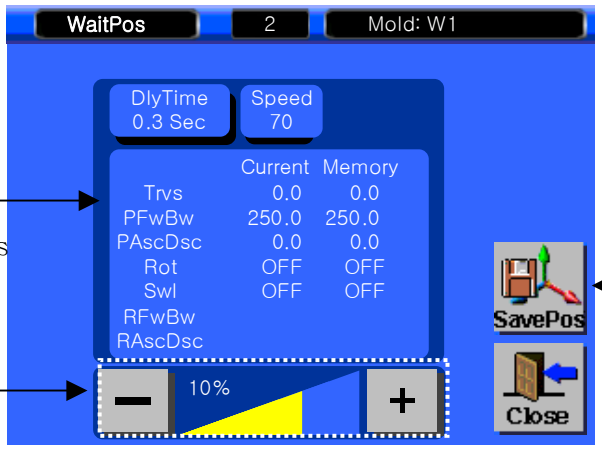

Position display window

Position value at each axis is displayed.

Speed controller

Save Position button

Stores the set position.

Speed controller

The speed of speed controller is composed of speed value and distance value, which are used for all axes.

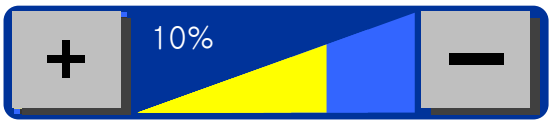

Pressing − reduces manual operation speed, and pressing + increases manual operation speed.

Speed value is percentage for rated speed, which is composed of 1%, 2%, 3%, 5%, 10%, 20% and 30%. Unit is %.

Distance value is 1% of speed value, which is a distance moved whenever manual button is pressed once.

This is composed of 10mm, 1mm, 0.1mm and 0.05mm. Unit is mm.

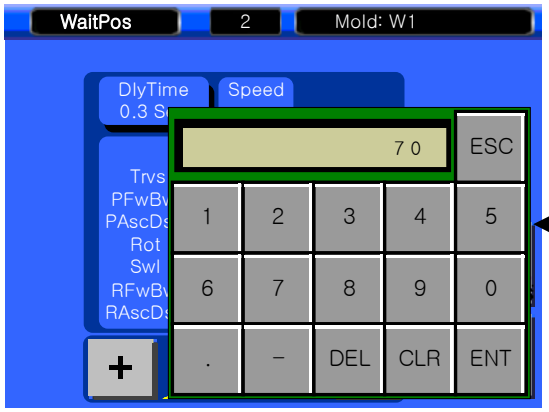

Numeric Keypad

This is used to input figure.

ESC– Numeric Keypad is closed without storing inputted figure.

DEL– Figure is cancelled one by one.

CLR– Figure is all cancelled.

ENT– Inputted figure is stored and Numeric Keypad is closed.

Focus

File display window

This displays the file list which is taught and registered.

Selection button

Focus is moved and selected.

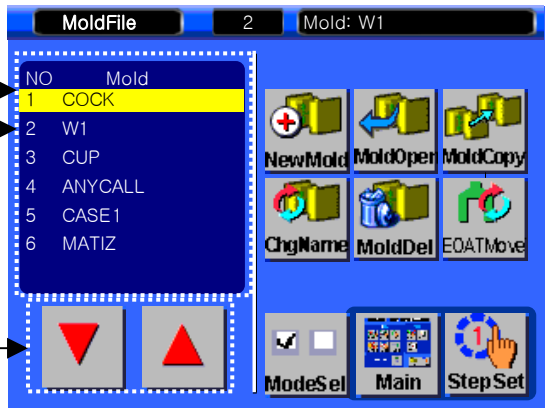

Mold number button

Mold name button

Focus

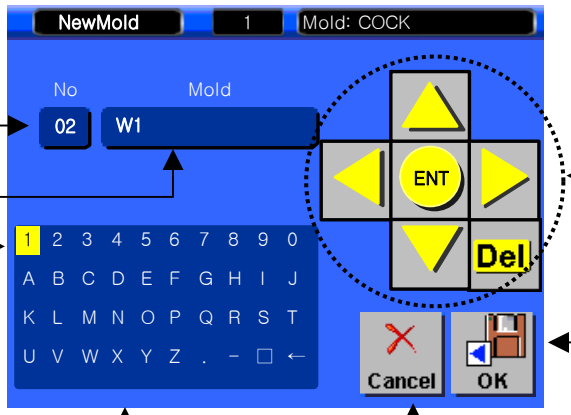

Arrow and Enter keypad

Check button

This stores setting and moves to previous screen

Cancel button

This moves to the previous screen without storing setting.

Alphabet and Numeric keypad

Alphabet and Numeric keypad: This is composed of figure, alphabet and special alphabet.

□ : Blank letter

← : Back space

Arrow key and Enter key

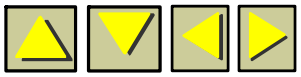

: Alphabet is selected by moving focus of alphabet and figure key pad up, down, left and right.

: Selected alphabet is inputted.

4.2Initial Screen

Power on displays Logo and Robot Name/type , Robot Initiation and Move Origin Point

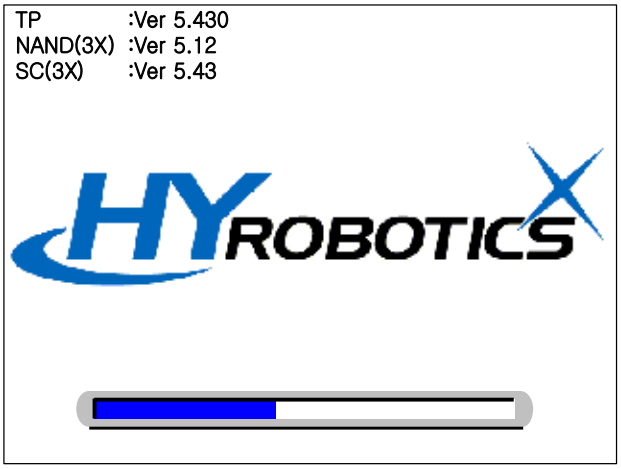

4.3 Search Origin

(1) Description

search origin point which is reference point of each axis of robot

NOTICE	Before searching origin point. make sure the robot arm is in safe location. If robot arm is not if safe location, move robot arm manually to safe location with manual button.

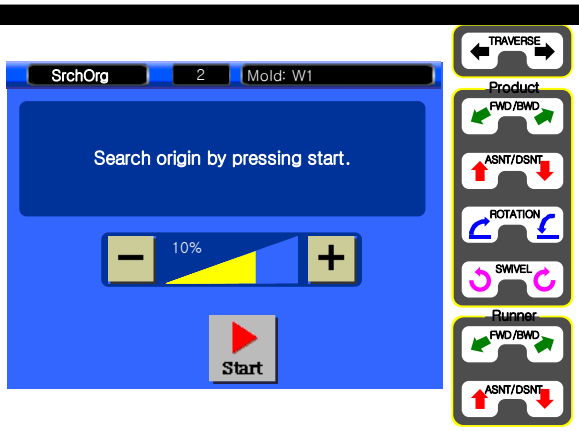

(2) Button Function

NO	Button	Description
1	Manual Button	Operate each axis manually.
2		Each Robot axis search homing point and stop.

4.5 Main

(1) Description

This performs setting and management for the entire robot system.

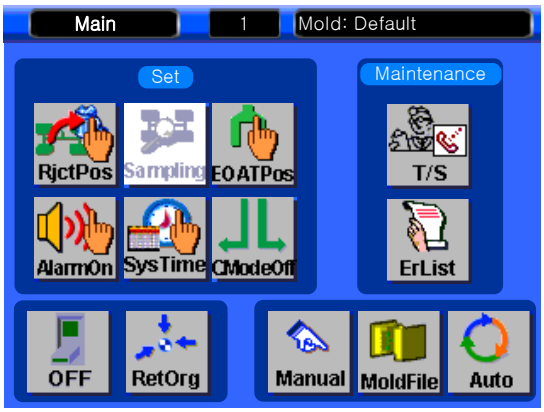

(2) Button Function

NO	Button	Description
1	RjctPos	Setting Reject Position screen which sets defective product Reject Position.
2	EOATPos	Setting EOAT Position screen which sets EOAT Position.
3	AlarmOn	Selects whether to make alarm or not during error occurrence. [Alarm On/Alarm Off]
4	SysTime	Moves to the time setting screen, which sets time of system.
5	CModeOff	Selects whether to move simultaneously at multiple axes when moving from Waiting Position to Take-out Position or from Take-out Position to Ascent Position. [Curve
6	T/S	Moves to Contact screen, which can check T/S information.
7	ErList	Moves to Error History screen, which can check error in the past.
8	OFF	Turns off system. (Servo drive off)
9	RetOrg	Moves each axis to origin point.
10	Manual	Checks I/O and moves to Manual screen which manually operates each axis and output.
11	MoldFile	Moves to Mold File screen.
12	Auto	Moves to Auto Mode screen in case there is the past operation file.

4.5.1 Reject Position

(1) Description

This sets the position to take-out defective product. Signal required from IMM or inspection system to rejected parts to reject position.

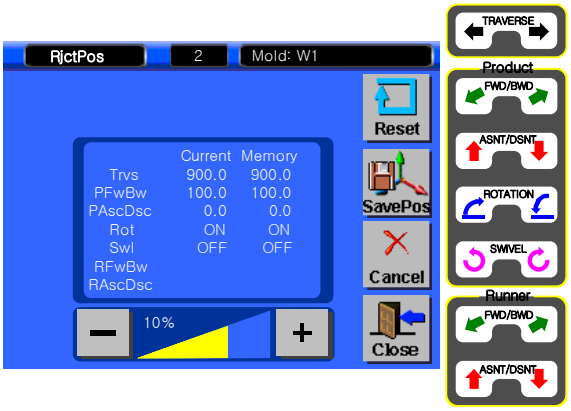

(2) Button Function

NO	Button	Description
1	Maunal button	Operate each axis manually.
2	Reset	Setting None.
3	SavePos	Save current Position
4	Cancel	Cancel
5	Close	Move to Main screen

(3) Example

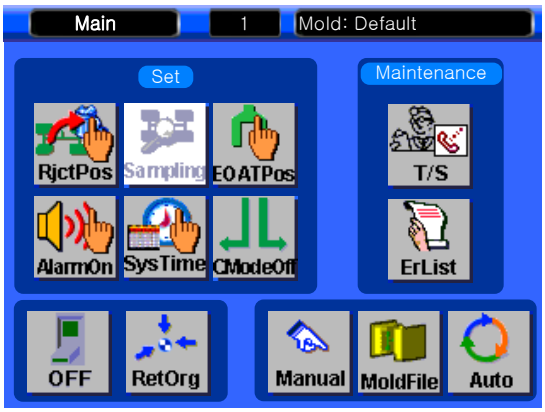

- **STEP 1**

Press 

move to Reject Postion screen.

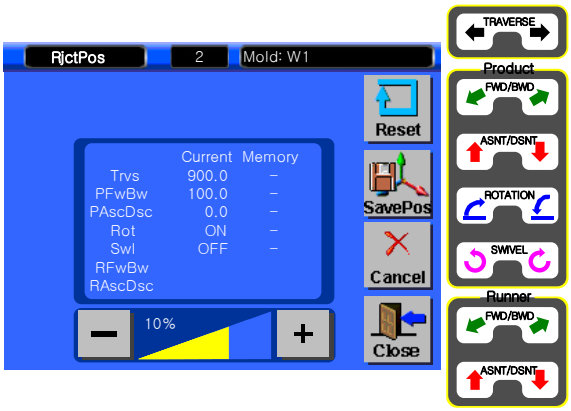

- **STEP 2**

Move robot to the setting position by pressing manual button

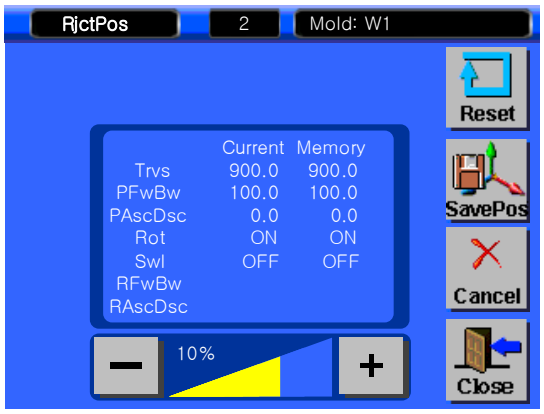

- **STEP 3**

Press  store the positon.

Press  move to Main screen.

4.5.2 EOAT Position

(1) Description

This sets the position of changing jig.

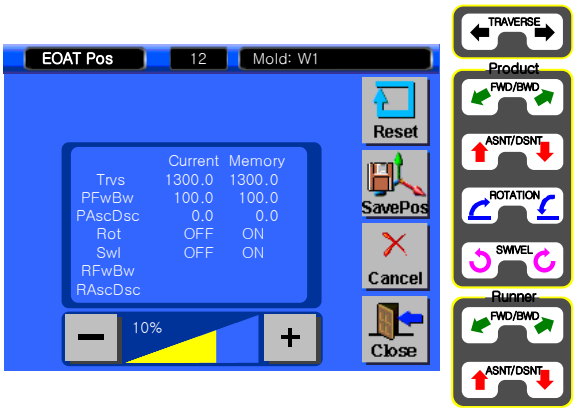

(2) Button Function

NO	Button	Description
1	Manual button	Move robot arm manually
2	Reset	Reset to no setting
3	SavePos	Save current Position
4	Cancel	Cancel saving
5	Close	Move to Main screen

NOTICE Need to set up outside of robot descent prevention area .

(3) Example

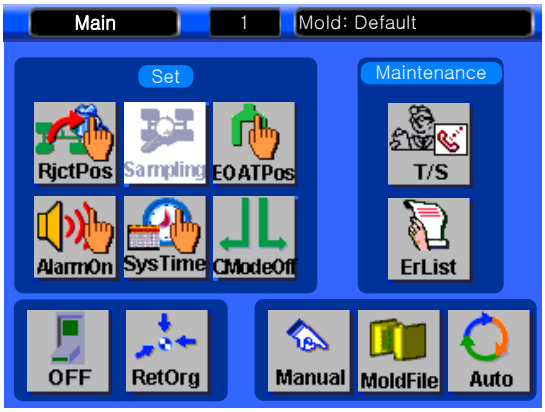

- **STEP 1**

Press  , move to setting for EOAT change

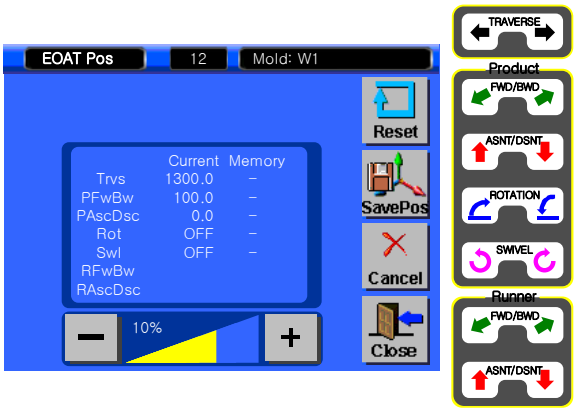

- **STEP 2**

Set EOAT change position with manual operation button.

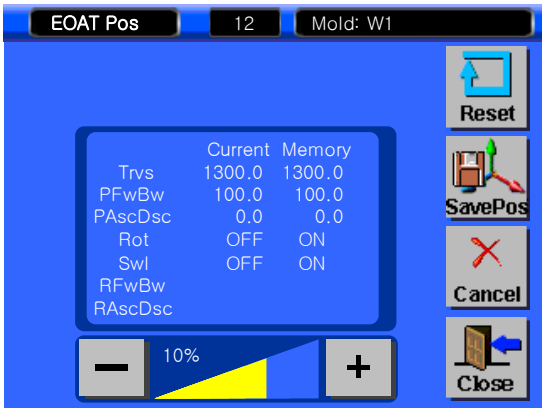

- **STEP 3**

Press  store the positon.

Press  move to Main screen.

4.5.3 System Time

(1) Description

This sets up system time of robot.

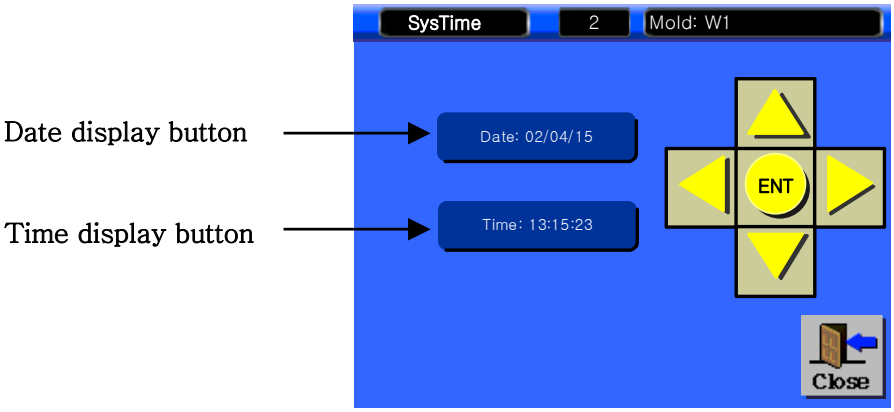

(2) Button Function

NO	Button	Description
1	Date: 07/04/15	Date setting
2	Time: 13:15:23	Time Setting
3		This cursor will move cursor to Year, Month, Date, and Time.
4		This cursor will set date, time.
5	ENT	Input number, Save
6	Close	Move main screen

(3) Date / Time Setting

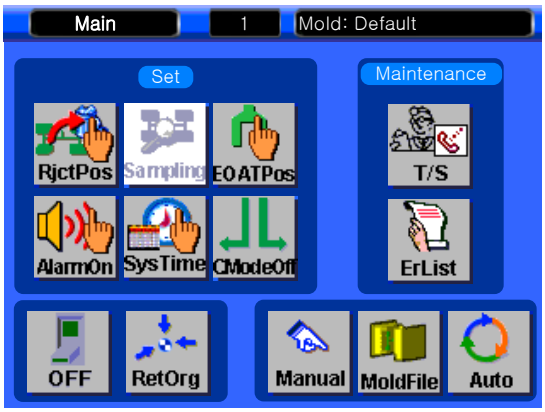

- **STEP 1**

Press 

, move to setting screen.

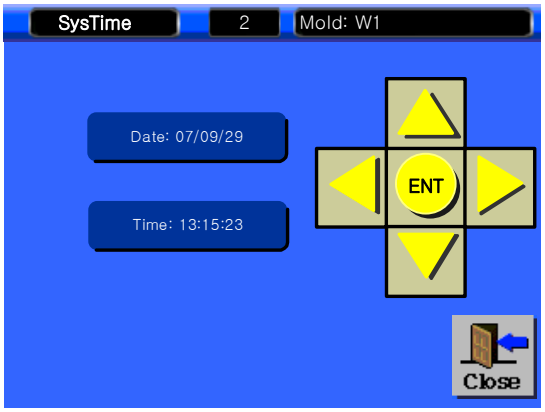

- **STEP 2**

Press 

.

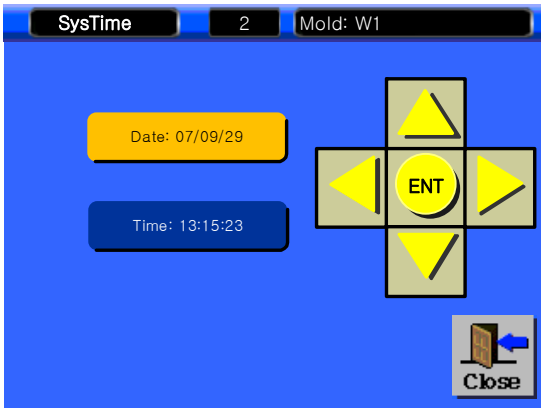

- **STEP 3**

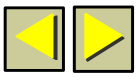
Move cursor

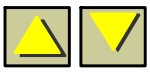
Set data

save data in system.

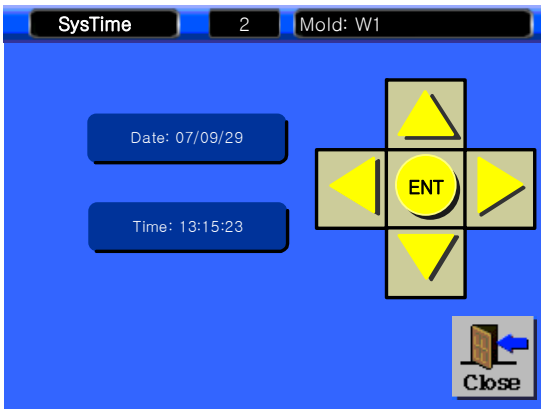

- **STEP 4**

Press 

move to Main screen.

(3) Timer Setting

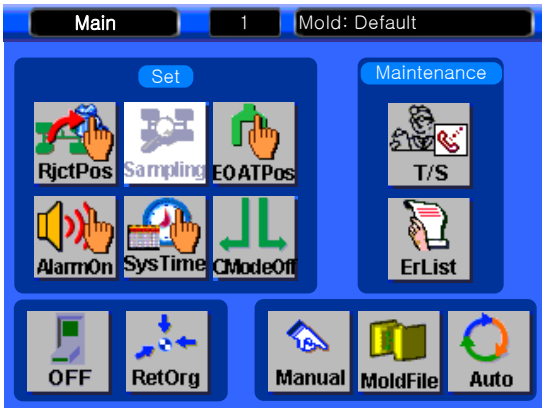

- **STEP 1**

Press  , move to timer setting screen

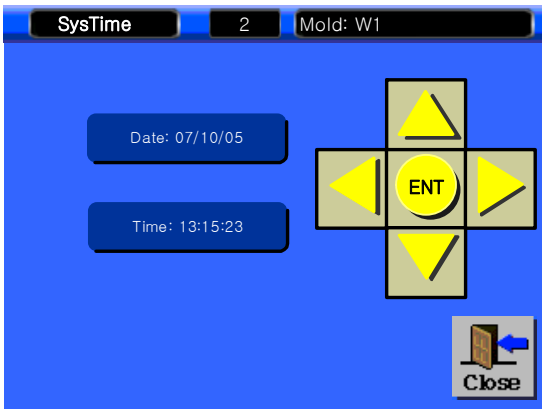

- **STEP2**

Press 

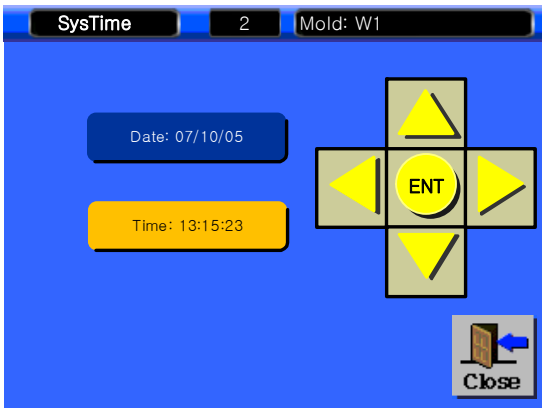

- **STEP 3**

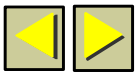 move cursor

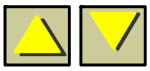 , set data

 save.

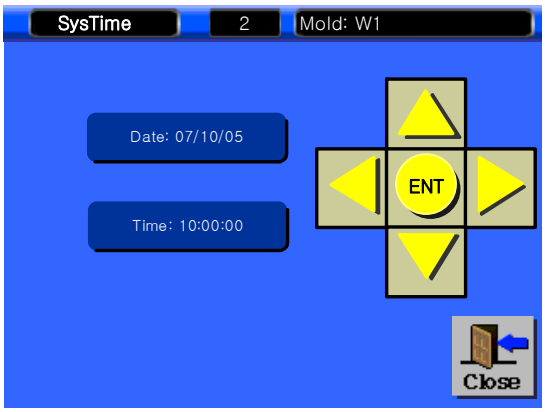

- **STEP 4**

 , move to main screen.

NOTICE

When time window is activated with date window activated, date window is deactivated and its content is stored. when date window is activated with time window activated, time window is deactivated and its content is stored.

4.5.4 Technical Service

(1) Description

This describes company name, address, phone number, fax number, homepage, mail and product number which are necessary for receiving T/S

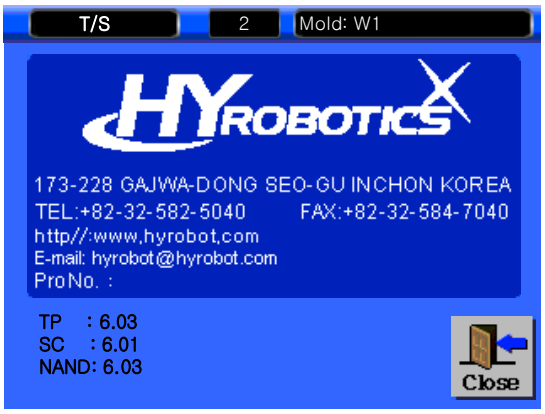

(2) Button Function

NO	Button	Description
1	Close	Move to Main screen.

(3) See contact

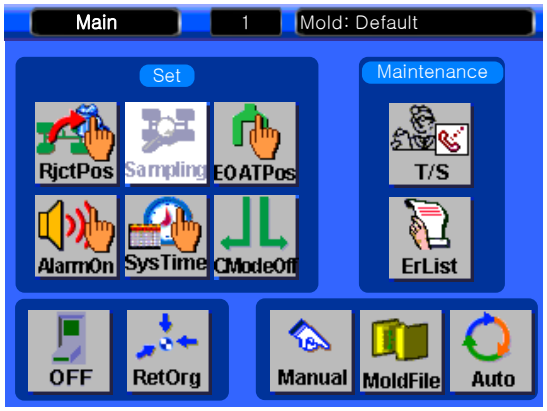

- **STEP 1**

Press 

, move to contact screen.

- **STEP 2**

This screen will show you version of each control (TP, SC, NAND) , let service department to know this version, press 

to close.

4.5.5 Error History

(1) Description

Error history display in this screen.

(2) Button Function

NO	Button	Description
1	PrevPage	Display error history in the next page.
2	NextPage	Display history in the previous page.
3	Close	Move to Main screen.

NOTICE

Error history is stored up to 100 sets.

When numbers of errors exceed 100 sets, the oldest error will be deleted and new error is added.

(3) Example

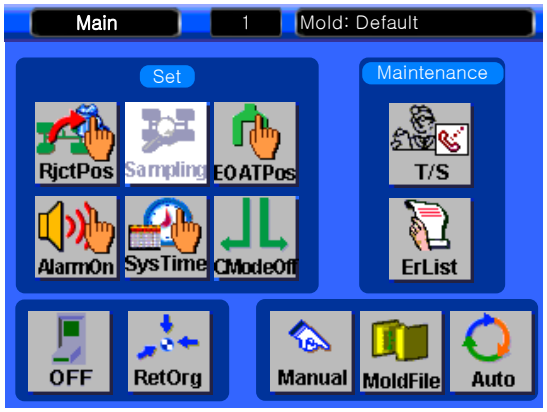

- **STEP 1**

Press 

, move to Error List

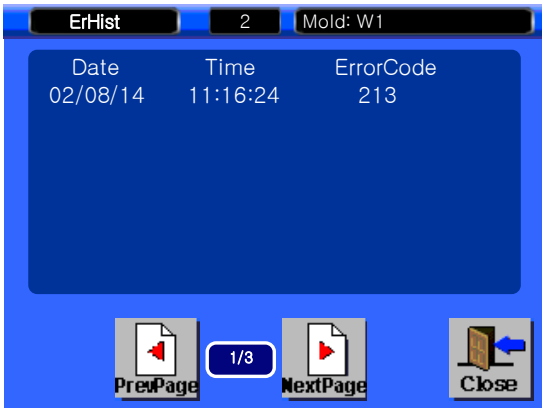

- **STEP 2**

Press 

, to go back to main screen.

4.5.6 Manual

(1) Description

This checks I/O and operates each axis and output manually.

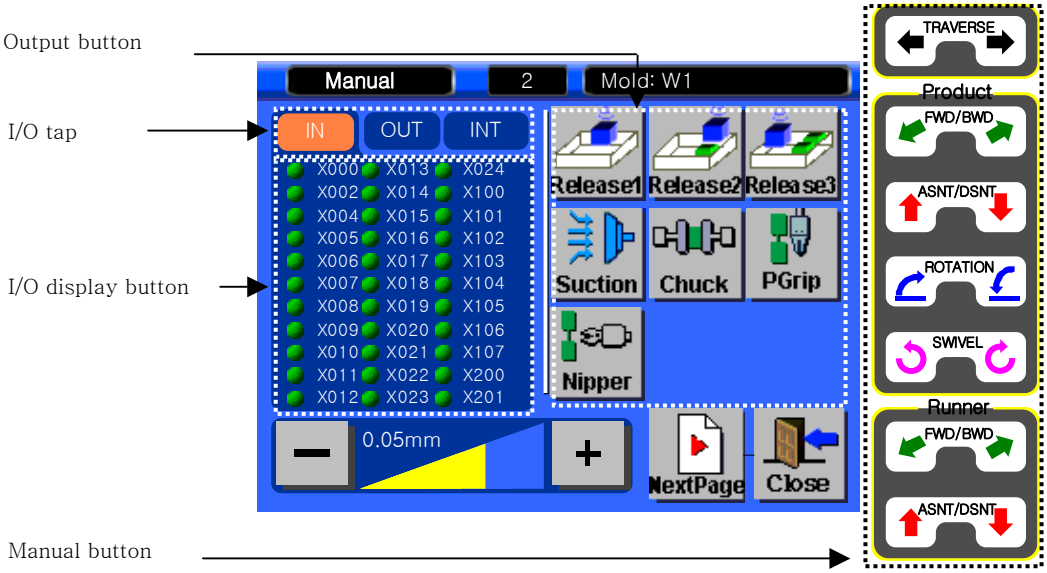

(2) Button Function

NO	Button	Description
1	IN	Display input signal.
2	OUT	Display output signal
3	INT	Display interlock signal
4	Release1	Turns on/off release 1 valve.
5	Release2	Turns on/off release 2 valve.
6	Release3	Turns on/off release 3 valve.
7	Suction	Turns on/off suction valve.[Suction On/Suction Off]
8	Chuck	Turns on/off chuck valve.[Chuck On/Chuck Off]
9	PGrip	Turns on/off product grip valve.[Product Grip On/Product Grip Off]

NO	Button	Description
10	SpOut1	Turns on/off Spare 1 Output.
11	SpOut2	Turns on/off Spare 2 Output.
12	SpOut3	Turns on/off Spare 3 Output.
13	SpOut4	Turns on/off Spare 4 Output.
14	UOut1	Turns on/off User Output 1.
15	UOut2	Turns on/off User Output 2.
16	UOut3	Turns on/off User Output 3.
17	UOut4	Turns on/off User Output 4.
18	UOut5	Turns on/off User Output 5.
19	UOut6	Turns on/off User Output 6.
20	UOut7	Turns on/off User Output 7.
21	UOut8	Turns on/off User Output 8.
22	NextPage	Show Next page
23	PrevPage	Show Previous Page
24	Close	Move to Main screen.

(3) Check Input and output signal

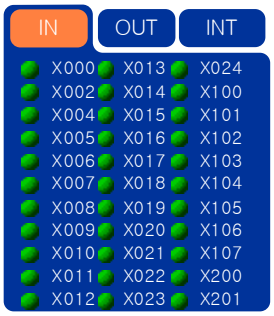

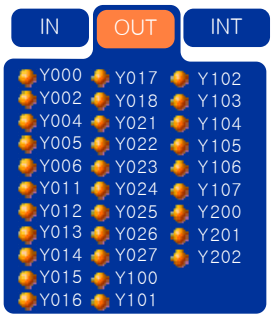

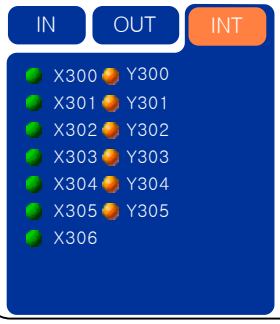

Input on display

Output on display

Off display

Pressing IN displays input signal on I/O display button. Press I/O display button in order to see description on input signal. Input signal description window appears.

Pressing OUT displays output signal on I/O display button. Press I/O display button in order to see description on output signal. Output signal description window appears.

Pressing INT displays interlock signal on I/O display button. Press I/O display button in order to see description on interlock. Interlock signal description window appears.

Signal Description Window

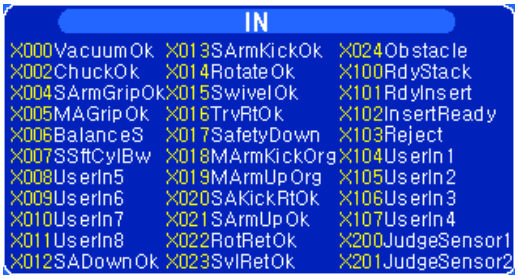

<Input signal description window>

<Output signal description window>

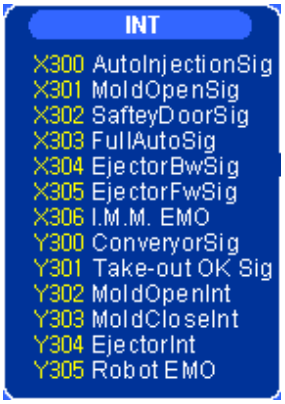

<Interlock signal description window>

4.6 Mold File

(1) Description

This creates, opens and copies Mold File, changes Mold File name, and changes jig.

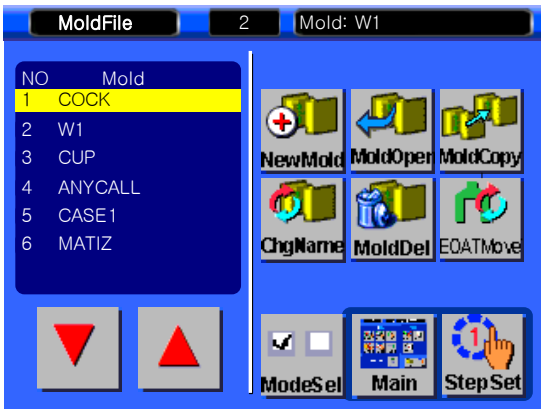

(2) Button Fuction

NO	Button	Description
1		Selects Mold File by moving focus up and down.
2		Moves to New Mold screen which creates new mold.
3		Opens Mold File where focus is located.
4		Moves to Mold Copy screen which copies data of Mold File where focus is located.
5		Moves to Change Name screen which changes name of Mold File where focus is located.
6		Cancels Mold File. Pressing cancel button displays a message [cancel mold name?], and [yes] cancels it and [no] does not cancel it. In case [YES] or [NO] is pressed, message window disappears.
7		Moves to EOAT Change screen which changes jig.
8		Moves to Main screen.
9		Moves to Step Setup screen.
10		Move to Mold Select screen

4.6.1 New Mold

(1) Description

This creates Mold File which has mold number and mold name.

Search mold number as blank number Automatically, and input mold name using alphabet selection and Enter button.

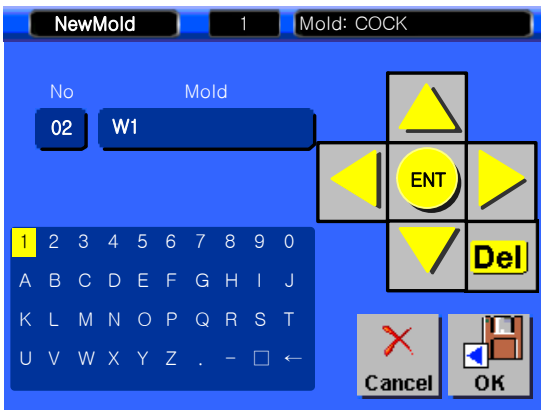

(2) Button Fuction

NO	Button	Description
1	Arrow button	Move cursor in text plate
2	ENT	Save the text with cursor
3	Del	Delete text and number
4	OK	Create new mold name and move back to set up screen.
5	Cancel	Cancel to creat new mold

NOTICE

Press and activate mold number input window in order to set up mold number arbitrarily. Other than figure cannot be inputted on mold number input window; inputting existing mold number displays a message "mold number already exists" and pressing OK makes window disappear.

NOTICE

Two Same Mold file can be created in one robots control.

(3) Example

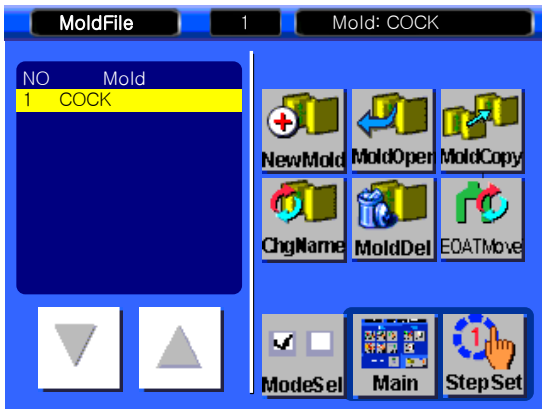

- **STEP 1**

Press  and move to new mold name set up screen.

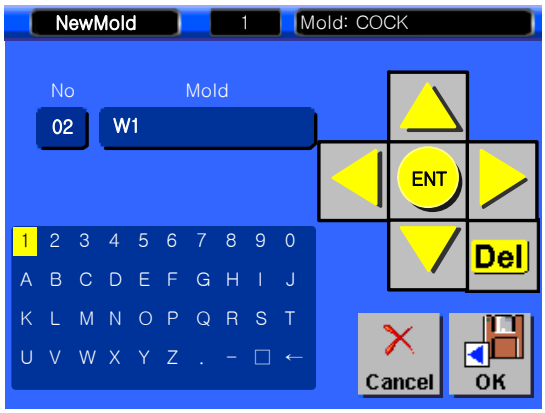

- **STEP 2**

Press 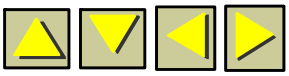 to move cursor, Press  , save text.

Press  , move to origin (homing) screen

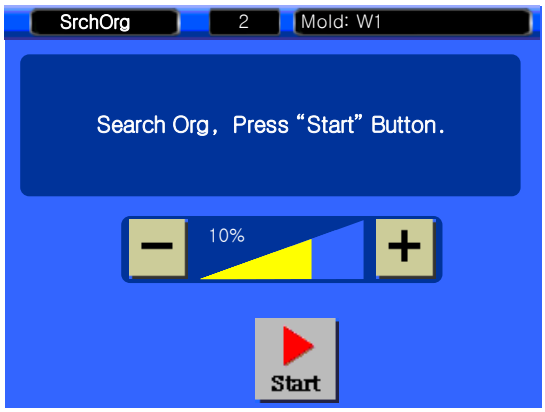

- **STEP 3**

Press  , robot arm move to origing point of new mold. Go back to main screen.

4.6.2 Copy Mold

(1) Description

This copies Mold File and creates new Mold File.

Copy includes the pattern copy which copies location and action of Mold File and the entire copy containing location value, delay time and speed value.

Mold number is given automatically by searching blank number, and mold name is inputted by using Arrow and Enter keypad.

Copy type selection

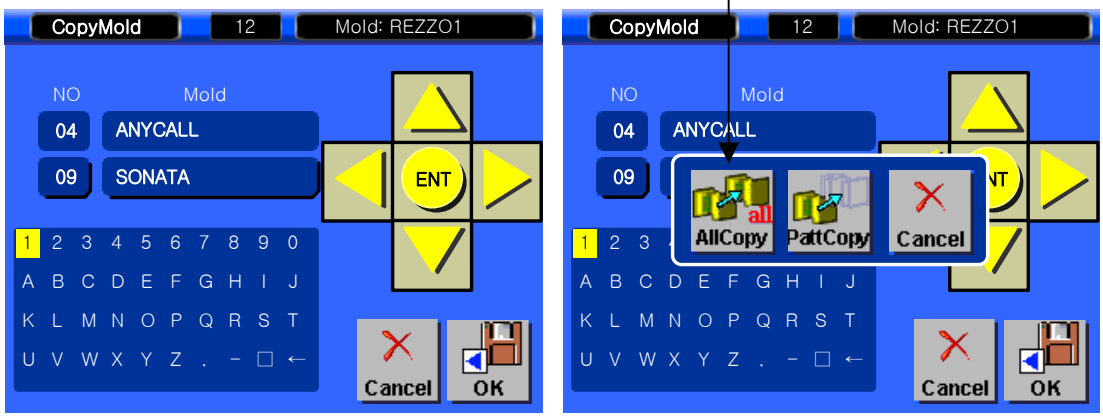

(2) Button Function

NO	Button	Description
1	Arrow button	Move cursor to select text and number.
2	ENT	Input number or text in Cursor.
3	Del	Delete input number and text.
4	OK	Show copy method. (All Copy and Pattern only Copy)
5	Cancel	Cancel Copy
6	AllCopy	Copy all information and move to next screen.
7	PattCopy	Copy of Robot motion pattern except position data. And move to mold maintenance screen.

(3) How to copy mold

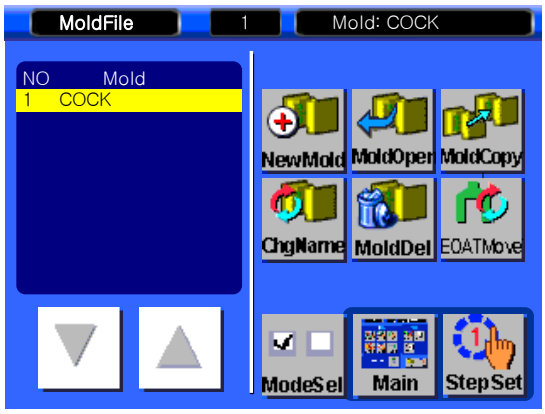

- **STEP 1**

Touch  , move to copy screen

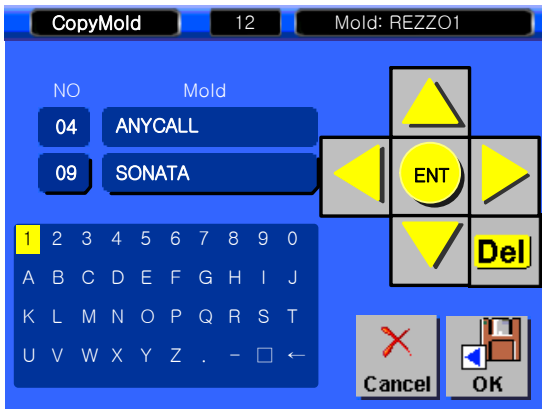

- **STEP 2**

Touch 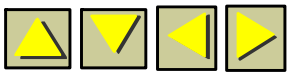 to move cursor,

touch  to save text.

Touch  move to servo origin point.

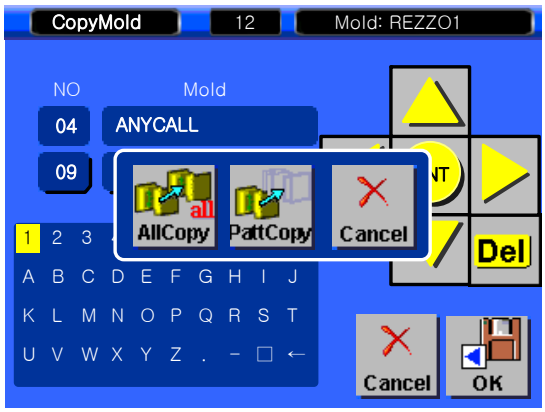

- **STEP 3**

To copy all information, touch or press  .

To copy only pattern of motion except position information, press 

Press  will move to servo origin point.

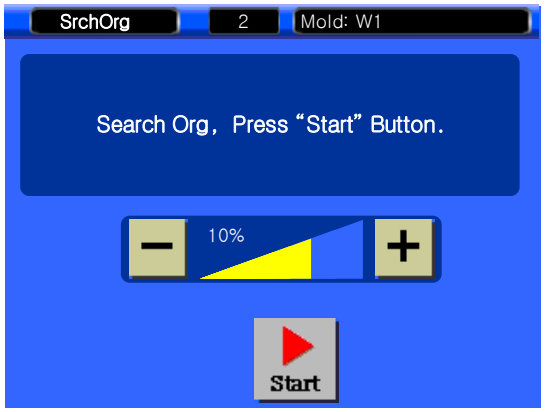

● **STEP 4**

Press  , to start servo origin point and move to mold maintenance screen.

4.6.3 Change Name

(1) Description

This changes mold name of Mold File

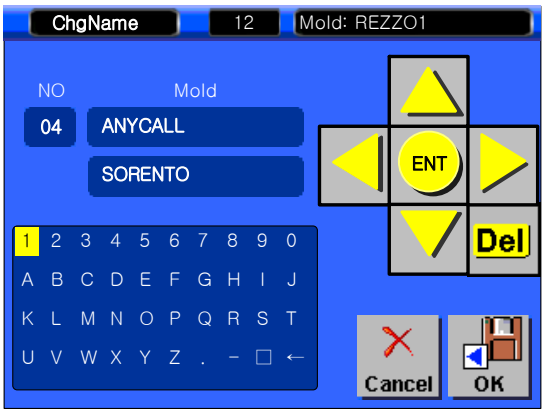

(2) Button Function

NO	Button	Description
1	Arrow button	Move cursor
2		Input text in the cursor
3		Delete text
4		Save name and move to mold maintenance screen
5		Cancel.

(3) Change Mold Name

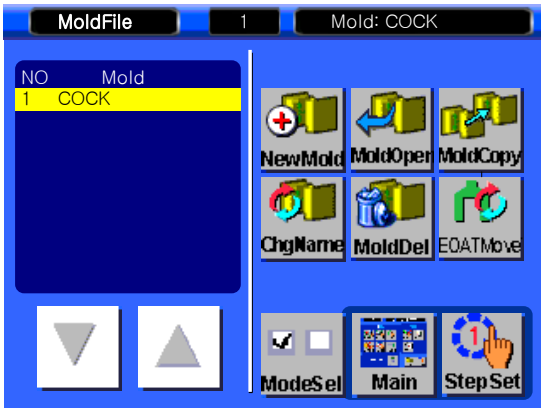

- **STEP 1**

Touch  move to change screen.

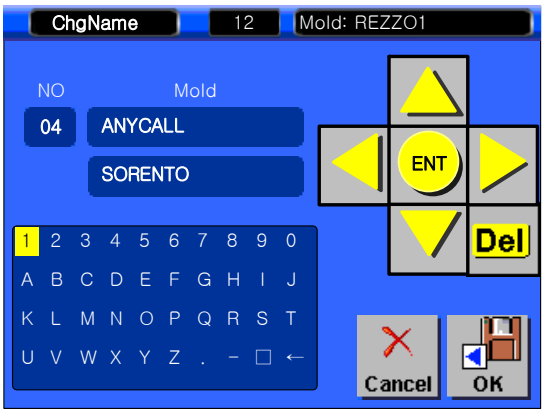

- **STEP 2**

Use 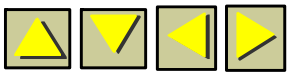 and select text.,

Press  to save.

Press  to move maintenance screen.

4.6.4 EOAT Change

(1) Description

This moves jig to the position convenient for change.

(2) Button Function

NO	Button	Description
1	Start	This will move robot arm to EOAT change position if that is set up.
2	Cancel	Cancel.
3	STOP	When robot arm move to EOAT change position, this button will stop the robots.

(3) Example

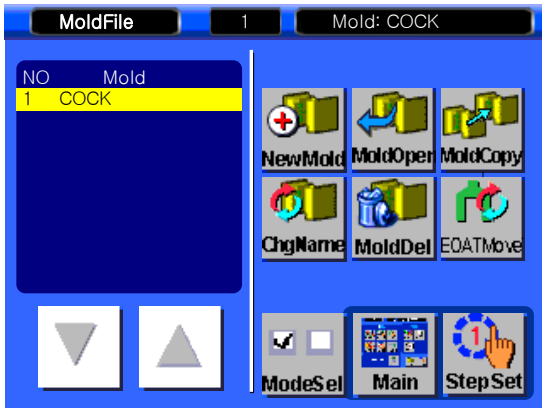

- **STEP 1**

Press  go to EOAT change move screen.

v

- **STEP 2**

Press  , robot arm will move.

- **STEP 3**

Press  , robot arm will move to EOAT change position.

4.6.5 Mode Select

(1) This will require to set up each mold

This is related with Robot motion and Injection molding Interface.

(2) Mode Function

Display	status	Description
Traverse with Rot	YES	Chuck Rotation during Traverse Motion
	NO	No Chuck Rotation motion during Traverse Motion.
Ejector	YES	Robot control eject during auto mode. (When robot arm down in the mold, allow IMM eject)
	NO	Robot is not control eject (No Interlock for eject)
EjectBwSig	YES	After chuck or suction parts, robot arm will move back after confirm ejector backward complete signal.

	NO	Without considering Ejector backward complete, robot arm move back and up after grip the parts.
EjtCnt	Number	Ejecting Number
Op Time	Operation Time	Maximum 1 cycle time during automatic mode. If actual cycle time exceed this time, robot will alarm.
Insert After Take-Out	YES	
	NO	

(3) Example

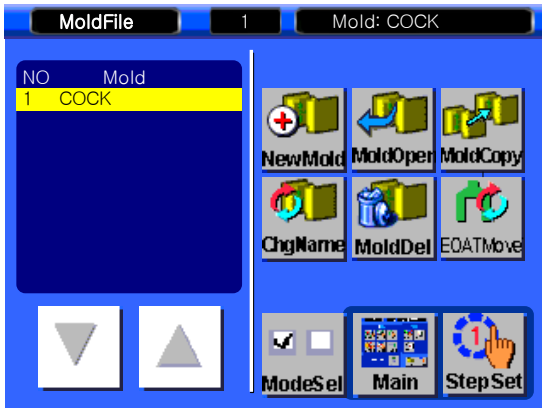

- **STEP 1**

Press 

, move to mode select screen

- **STEP 2**

Select or Change each mode with pressing rectangular box.

Press 

, move to mold maintenance screen.

4.7 Step Setup

(1) Description

Setup each step, and perform step operation according to the set step.

Step operation is possible only when there is set Mold File and the Mold File is open.

NOTICE

What is step?

This refers to a general name of dividing work of robot such as position movement from A position to B position, signal input from sensor or outside equipment, action of pneumatic cylinder according to output, and signal output to external equipment.

Robot operates with division of step unit, and combination of each step makes entire process.

4 steps of Waiting Position, Take-out Position, Ascent Position and Release Position are given to each mold for safety with Injection Mold Machine, and basic take-out action is enabled only by setting these 4 steps. And they you can add any position motion in addition of this steps. New mold does not include information such as delay time, speed, position value and take-out method in these 4 steps, so each information shall be inputted by correcting step.

(2) Button Function

NO	Button	Description
1		This creates position name after moving to position name input screen to add user position, and moves to position adding screen.
2		Moves to action adding screen to add user action.

NO	Button	Description
3		Corrects content of step. Waiting Position, Take-out Position, Ascent Position and Release Position move to each relevant screen, user position moves to position correcting screen, user action moves to action correcting screen, grip position moves to grip position screen, input waiting moves to input waiting screen, and user output moves to user output screen. **(Waiting Position, Take-out Position, Ascent Position and Release Position can be set up only by ModiStep)**
4		Moves to step cancel screen, which cancels step. **(Waiting Position, Take-out Position, Ascent Position and Release Position cannot be cancelled, and position value only can be cancelled.)**
5		Moves to Grip Position screen, which sets up Grip Position.
6		Moves to Display I/O screen which checks I/O.
7		Receives signal input, and then moves to Input Waiting screen which performs next step.

8	Output	Moves to User Output screen, which adds user output.
9	MoldFile	Moves to Mold File screen.
10	Auto	Moves to Automatic peration.
11	EndWork	Completes current work and then moves to Main screen.

(3) Example

[Step Setup]

Add each step and position.

- **STEP 1**

Pressing  displays a message "Non-setting of position information", Close message window by pressing  .

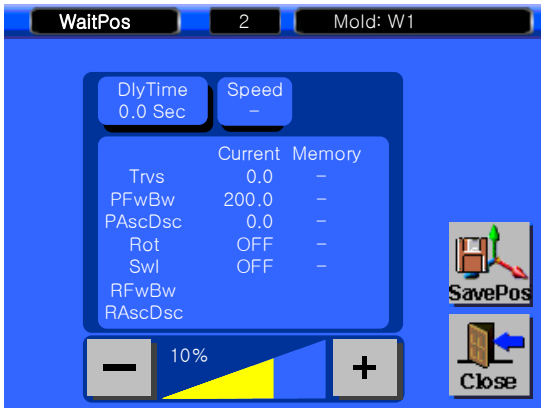

● **STEP 2**

Press  to move to current step setting.

※ Only Step Modification allow to change for basic step. In case of step addition(Add Position, Add action, Grip Position, Input Waiting, User Output) is performed, step is added below focus of step window.

● **STEP3**

After completing correction of basic 4 steps, pressing  makes robot move to Waiting Position. Press each step with  . When only robot step through all steps (for new mold or after change mold),  is activated and it becomes possible to move to Automatic operation screen.

[Step operation] – When Step Setup is finished

All step will run with low speed to make sure the setting is right, press stop or E-Stop button if something is not right during operation.

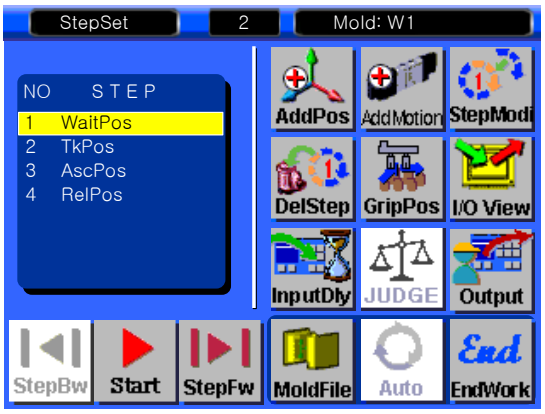

● **STEP 1**

Pressing  starts step operation, and  is converted into  .

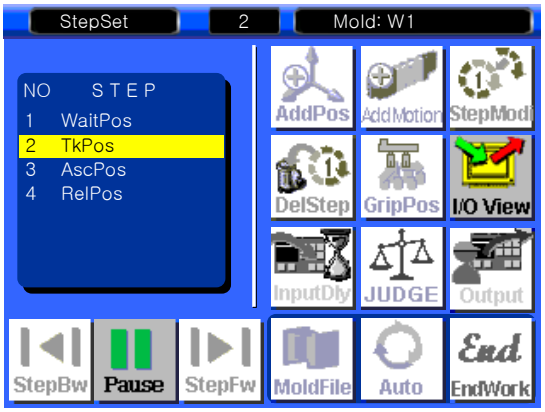

- **STEP 2**

Pressing  makes robot finish the step under progress and stop, and  is converted into  .

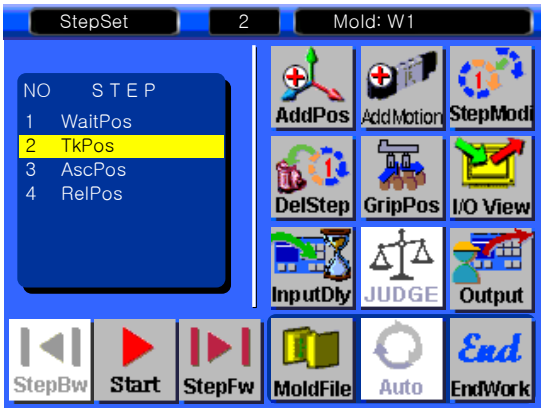

- **STEP3**

Pressing  makes robot perform next step and then stop.

4.7.1 Add Position on Basic 4 Steps

(1) Description

This adds user position.

NOTICE	In case position name is not inputted, it is impossible to move to Add Position screen.

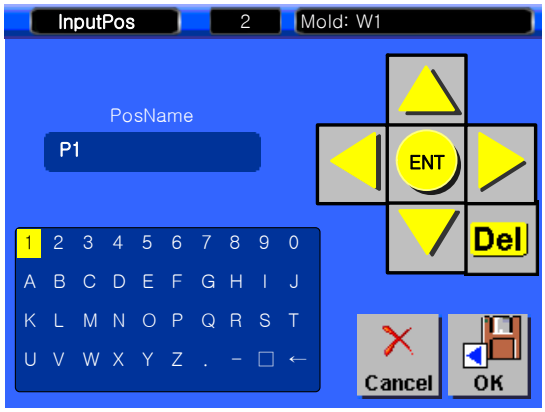

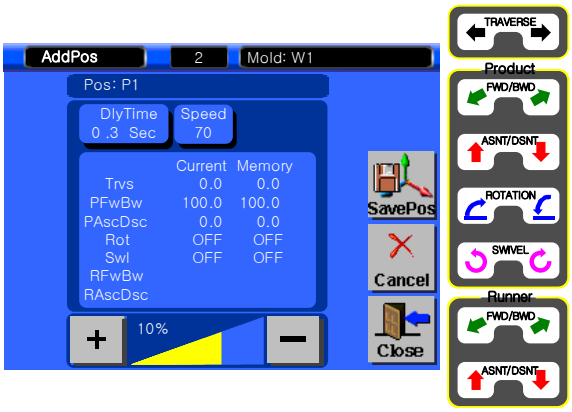

(2) Button Function

NO	Button	Description
1	Arrow button	Press arrow button to move cursor to desired text.
2	ENT	Input text on Cursor.
3	Del	Delete text.
4	OK	Create file name and move to Mold Manager file
5	Cancel	Cancel creation.
6	DlyTime 00 .0 Sec	Delay time before moving to arbitrary position. [inputted by numeric key pad]
7	Speed 000	Speed to move new location. (Input with Keypad)
8	Manual button	Operate robot with this button to get position.
9	SavePos	Save current position
10	Close	Close and move back to step screen.

(3) Example

When moving from position P0 to position P1 at 70% speed after 0.3 second delay time

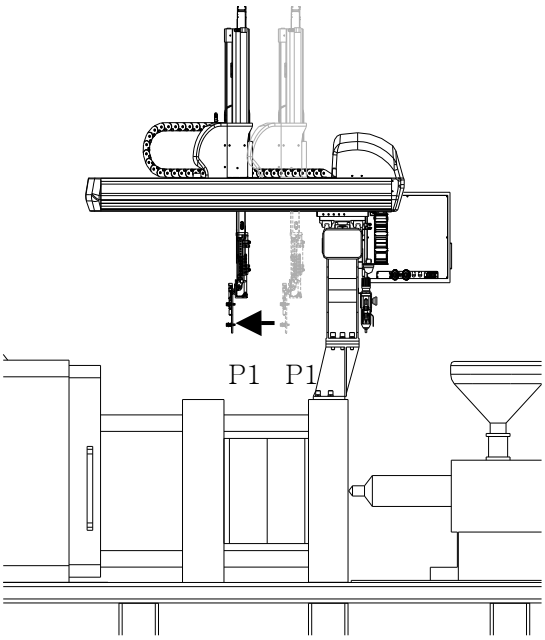

Position		
Each axes	P0	P1
Traverse	0 mm	0 mm
Main Arm Kick/Return	0 mm	100 mm
Main Arm Up/down	0 mm	0 mm
Rotation	OFF	OFF

- **STEP 1**

Press 

, move to Position Name setting screen. (This will allow operator to remember each step's position)

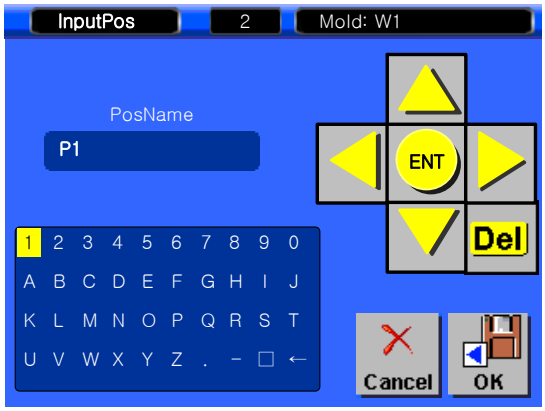

- **STEP 2**

Use arrow to select text. And Press ENT to input text

- **STEP 3**

Press 

, move to position setting screen.

Press 

, to cancel go back to mold setting screen.

P1 P0

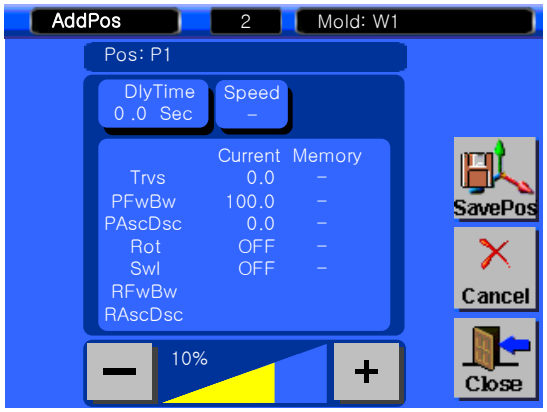

● STEP 4

[Setting for delay time at 0.3 second]

In order to set up delay time before moving to P1, Pressing DlyTime 0 .0 Sec shows numeric keypad.

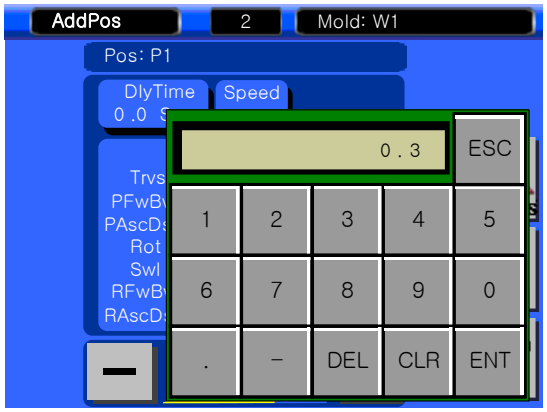

Make input by pressing 0 . 3 in regular order, store delay time by pressing ENT, and then close window.

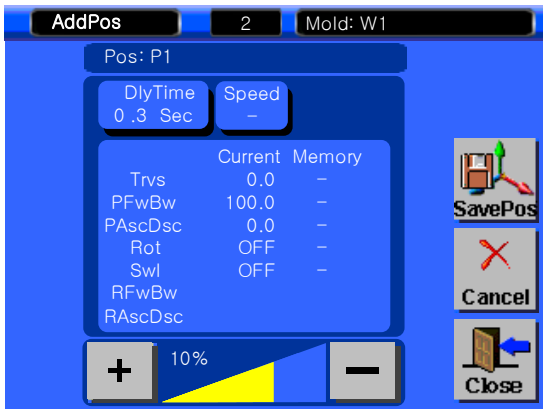

● STEP 5

[Speed setting as 70%]

In order to set up speed while moving to P1, Pressing Speed – shows numeric keypad.

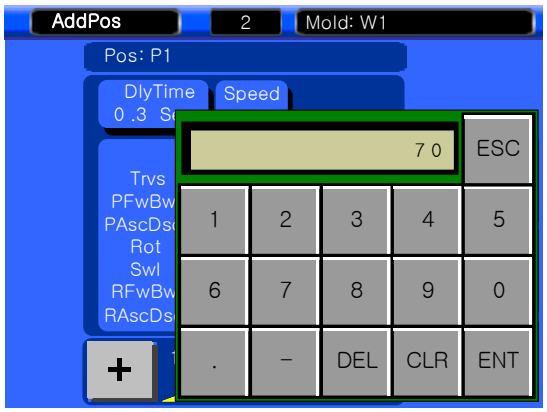

Make input by pressing 7 0 in regular order, store speed by pressing ENT, and then close window.

- **STEP 6**

[Setting Position]

Press Manual to move robot position.

Press  to save position, press  to go to step edit screen..

⚠DANGER	Do not add position with many axis movement for 1 position, Robot might move to the position without your intention. Manually move robot arm for 1 axis and save.

4.7.2 Add Motion

(1) Description

This screen allow to add suction, chucking, Spare output or release output that already selected.

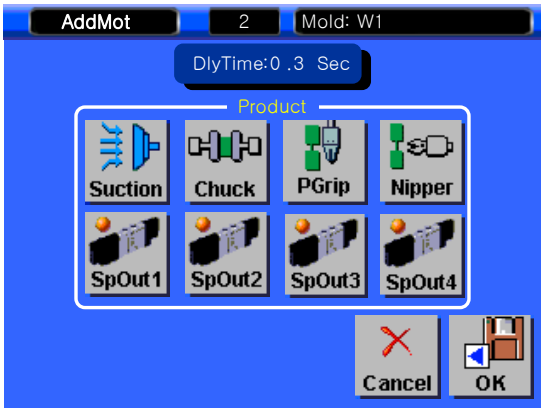

(2) Button Function

NO	Button	Description
1	DlyTime:0 .0 Sec	Set up delay time before performing action. [Input with numeric keypad]
2	Suction	Turn on/off suction.[Suction On/Suction Off]
3	Chuck	Turn on/off chuck.[Chuck On/Chuck Off]
4	PGrip	Turn on/off product grip.[Product Grip On/Product Grip Off]
5	Nipper	Operate nipper.
6	SpOut1	Turn on/off spare out 1.
7	SpOut2	Turn on/off spare out 2.
8	SpOut3	Turn on/off spare out 3.
9	SpOut4	Turn on/off spare out 4.
10	OK	

NOTICE

Addition, chuck, product grip, nipper, spare 1, spare 2, spare 3 and spare 4 of action addition indicate status of robot. Setting and canceling by pressing each relevant button operate robot according to it.

(3) How to Set

Example) When operating suction after 0.3 second delay time

- **STEP 1**

Press  , to add motion

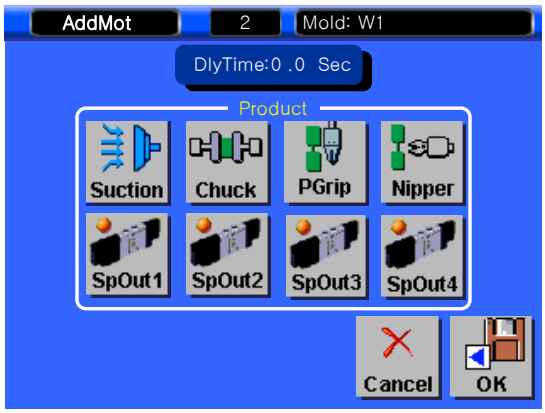

- **STEP 2**

Press DlyTime:0 .0 Sec to input delay time.

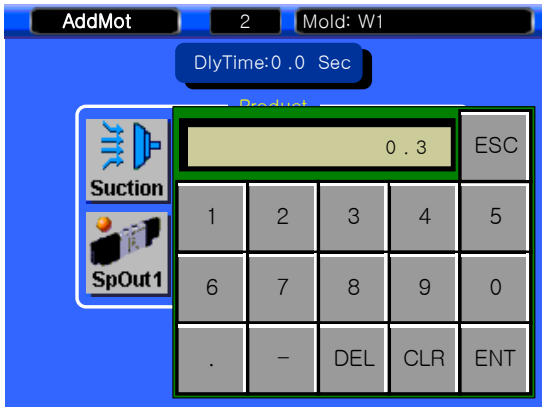

- **STEP 3**

Press . 3 to set 0.3 Sec for delay time.

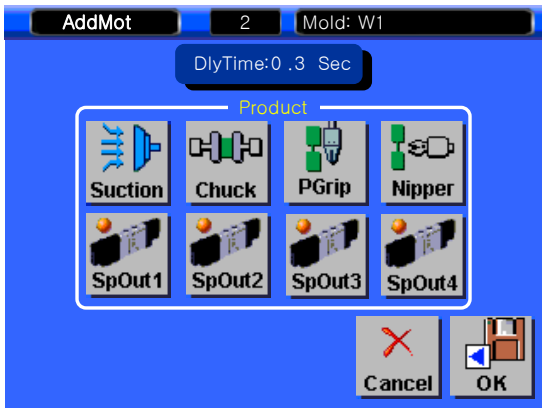

- **STEP 4**

Press  for suction on.

Press  to save and move to step screen.

4.7.3 Modify Step

This step can change each step data. Modify Step is for changing basic positions such as Waiting Position, Take-out Position, Ascent Position and Release Position and each relevant step depending on steps to change position and timer.

4.7.3.1 Waiting Position

(1) Description

This is a position to wait for opening of mold, where mold and jig does not make interference.

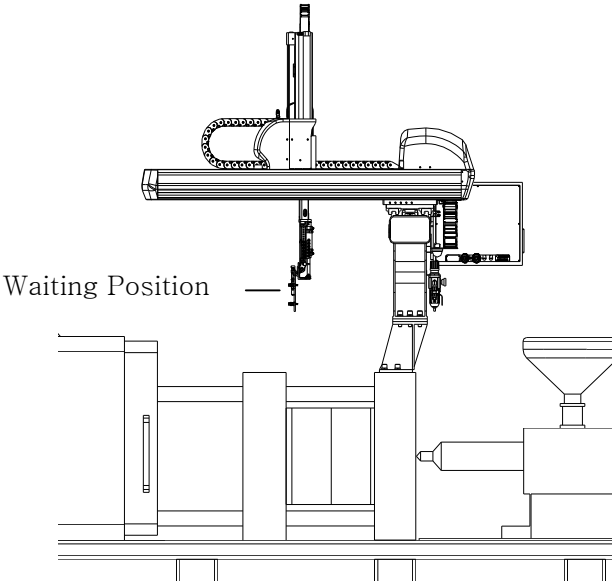

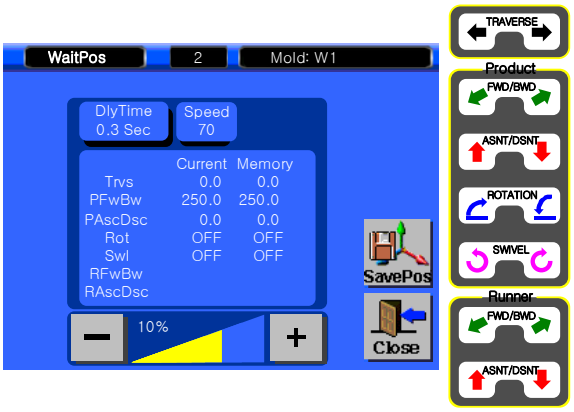

(2) Button Function

NO	Button	Description
1	Manual Button	Move Robot arm Manually
2	DlyTime 00 .0 Sec	This is delay time before moving to Waiting Position. [Input with numeric keypad]
3	Speed 000	This is a speed necessary for moving to Waiting Position. [Input with numeric keypad]
4	SavePos	Save current position and data
5	Close	Close screen move back to step screen.

(3) Example

To change position from P1 to P2 with 70% of speed with 0.3 Sec Delay time.

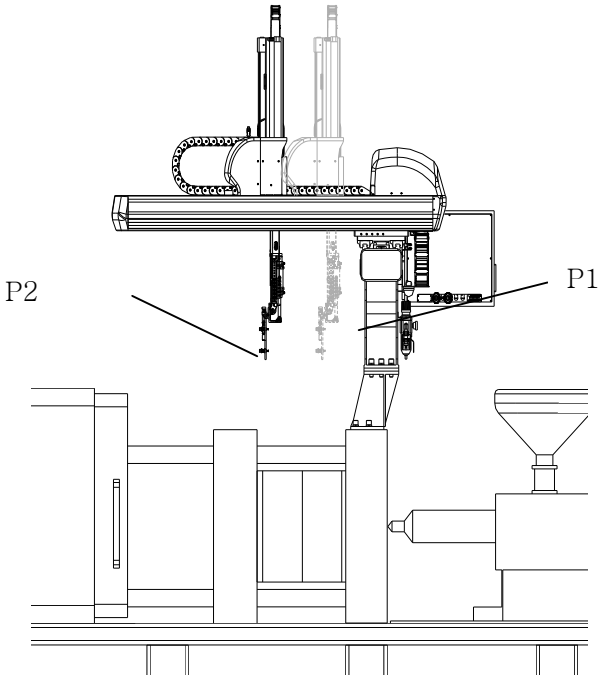

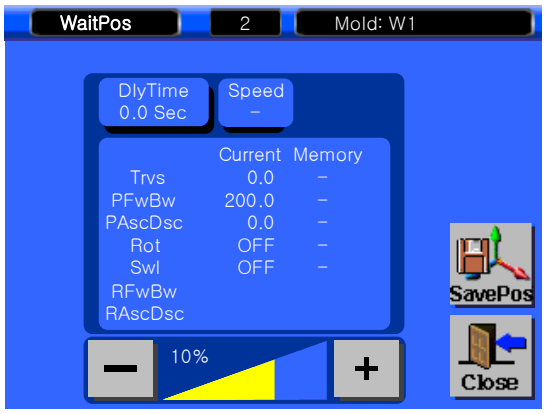

- **STEP 1**

[In case of setting delay time as 0.3 second]

In order to setting delay time before moving to Waiting Position, pressing DlyTime 0.0 Sec shows numeric keypad.

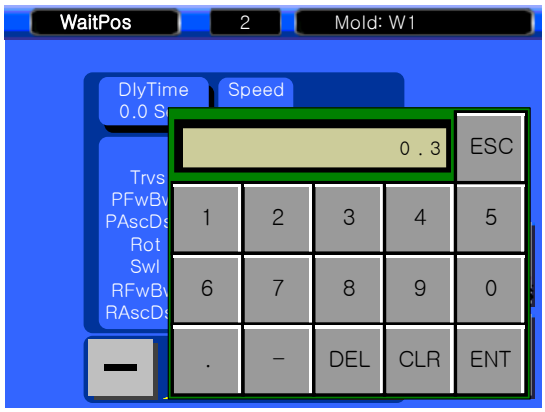

Make input by pressing 0 . 3 in regular order, store delay time by pressing ENT, and then close window.

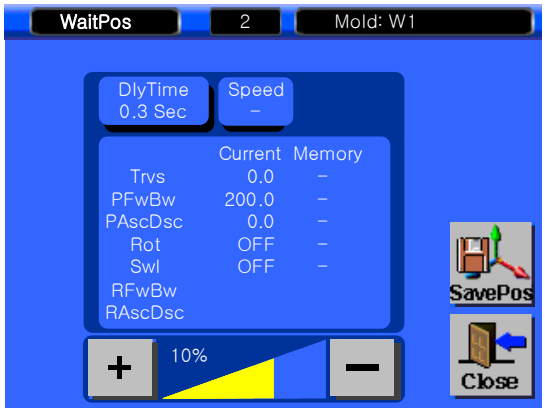

● STEP 2

[In case of setting speed as 70%]

In order to set up speed while moving to Waiting Position, pressing Speed – shows numeric keypad.

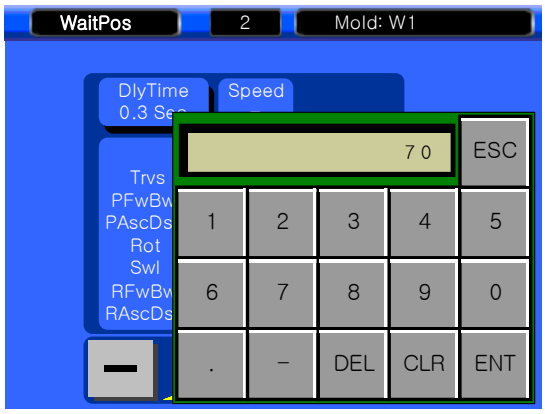

Make input by pressing 7 0 in regular order, store speed by pressing ENT, and then close window.

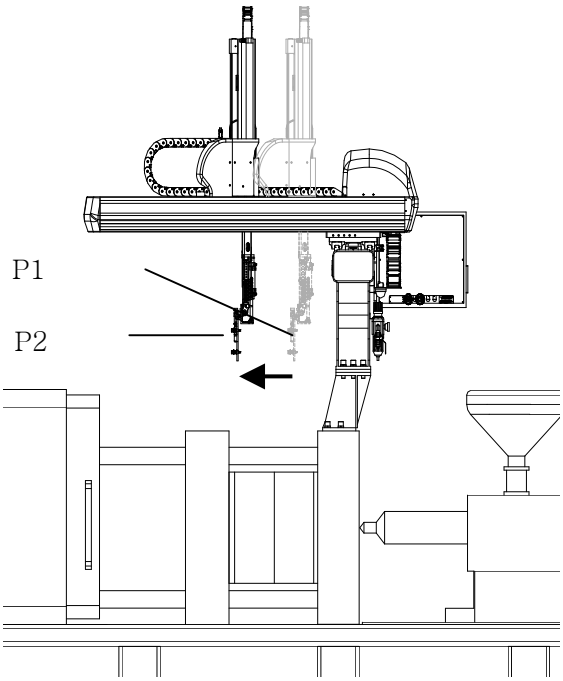

Position		
Each axes	P1	P2
Traverse	0 mm	0 mm
Main Arm Kick/Return	200 mm	250 mm
Main Arm Up/down	0 mm	0 mm
Rotation	OFF	OFF

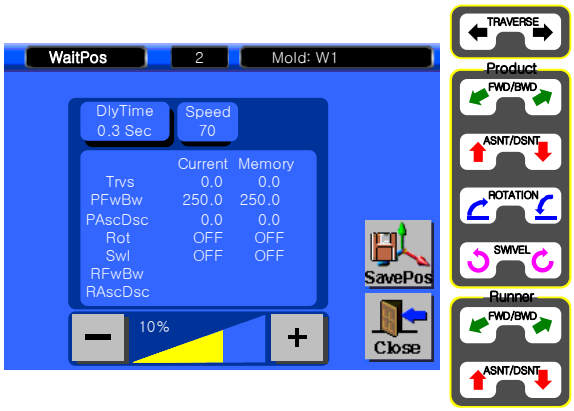

- **STEP 3**

Move it until product forward/backward of current value indicates 250.0 by pressing traverse of manual button.

Store current value by pressing 

, and then

move to Step Setup screen by pressing 

.

4.7.3.2 Take-out Position

(1) Description

This step is for creating position to take out parts or sprue. It has Delay time before to move this position, Speed, Position. And this step has delay time to activate vacuum or chucking, and take out method, chucking, suction or spare output.

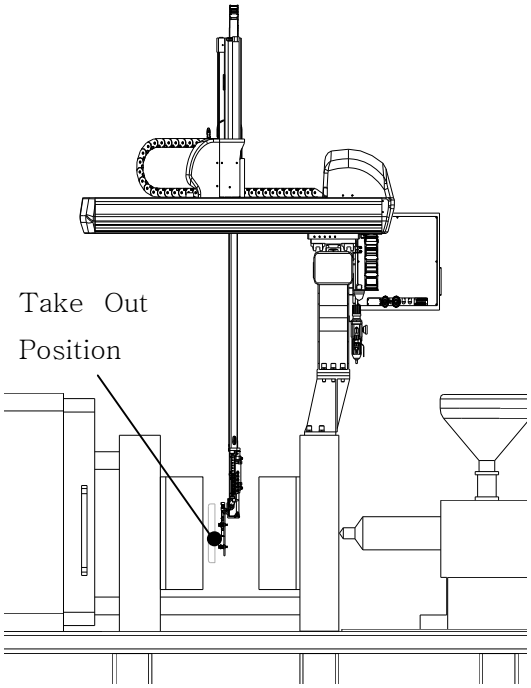

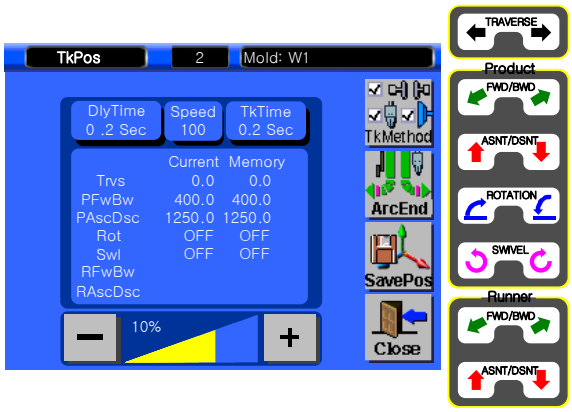

(2) Button Function

NO	Button	Description
1	DlyTime 00 .0 Sec	Indicates and sets up delay time before moving to Take-out Position. [Input with numeric keypad]
2	Speed 000	Indicates and sets up speed necessary for moving to Take-out Position. [Input with numeric keypad]
3	TkTime 00.0 Sec	Take-out delay is a delay time until product is chucked after arriving at Take-out Position. Take-out delay is indicated and set up. [Input with numeric keypad]
4	TkMethod	Stores position.
5	ArcEnd	Take-out method window to select Take-out Method appears.
6	SavePos	Save current position
7	Close	Close screen and move to step

NOTICE Take-out delay is a delay time until product is chucked after receiving ejector forward completion signal since arriving at Take-out Position.

Take-out method window

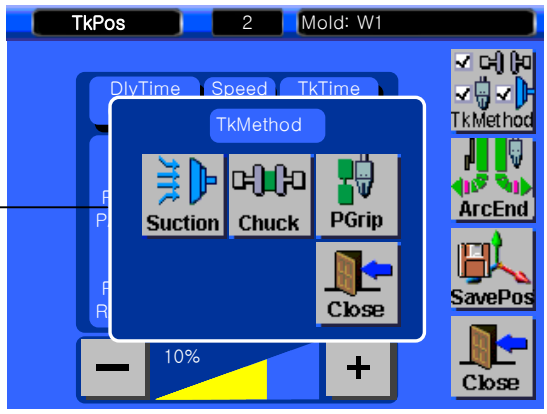

NO	Button	Function
1	Suction	Turns on/off suction.[Suction On/Suction Off]
2	Chuck	Turns on/off chuck.[Chuck On/chuck Off]
3	PGrip	Turns on/off product grip.[Product Grip On/Product Grip Off]

NOTICE In take-out method, chuck and product grip operate after having the set take-out delay, and suction operation is started simultaneously with starting to move to Take-out Position so as to operate regardless of set take-out delay.

NOTICE

1) Initial Setting.

Robot will perform setting and save current setting.

2) After Step setting.

After step set, before change setting, take method will be same as current setting.

(3) Example

In case of setting 0.2 second delay time, 100% speed, 0.3 second delay time before chucking product, position from Waiting Position to Take-out Position

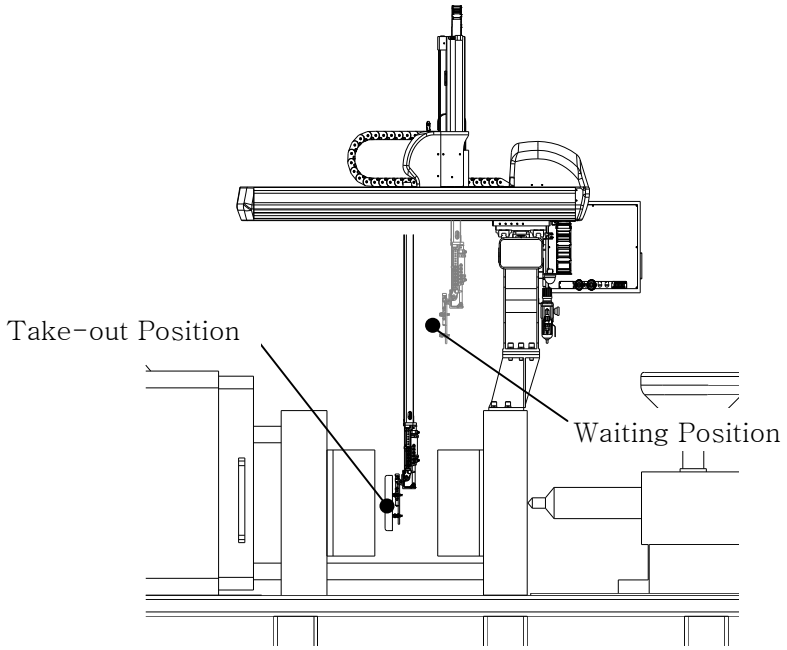

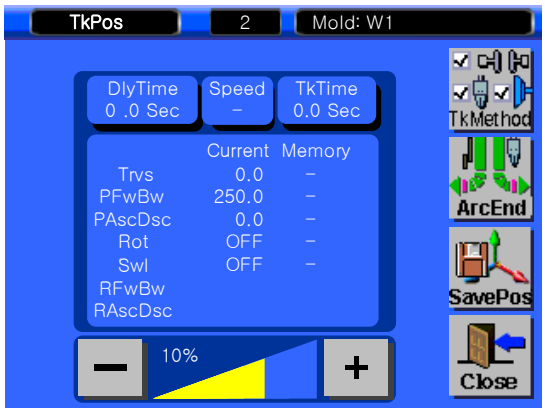

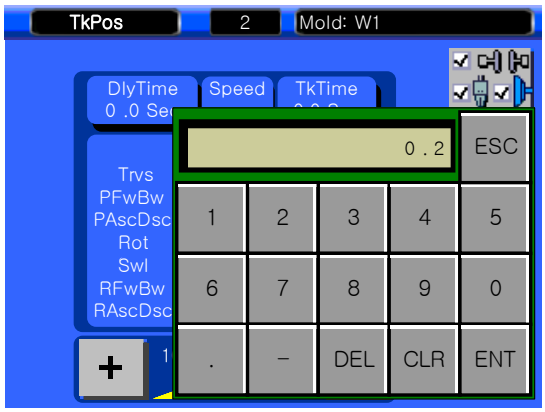

- **STEP 1**

[0.2 second delay time before moving to Take-out Position]

In order to setting delay time before moving to Take-out Position, pressing DlyTime 0 .0 Sec shows numeric keypad.

Make input by pressing 0 . 2 in regular order, store delay time by pressing ENT, and then close window.

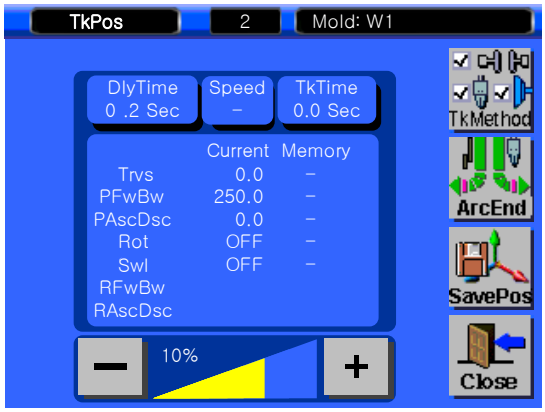

● STEP 2

Speed setup with 100 % to take out position

In order to set up speed while moving to Take-out Position, pressing [Speed –] shows numeric keypad.

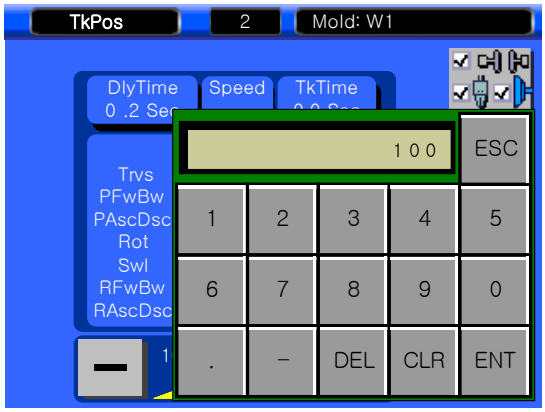

Make input by pressing [1] [0] [0] in regular order, store delay time by pressing [ENT], and then close window.

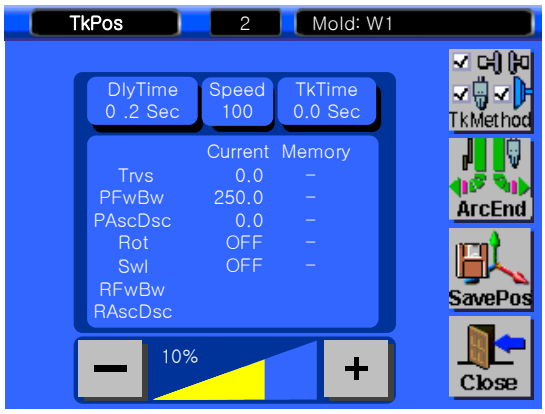

● STEP 3

[0.3 second delay time before chucking product]

In order to setting delay time 0.2 second before chucking product after arriving at Take-out Position, pressing [TkTime 0.0 Sec] shows numeric keypad.

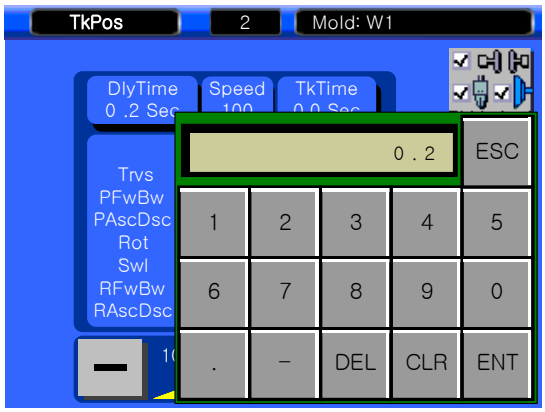

Make input by pressing [0] [.] [2], store take-out time by [ENT], and then close window.

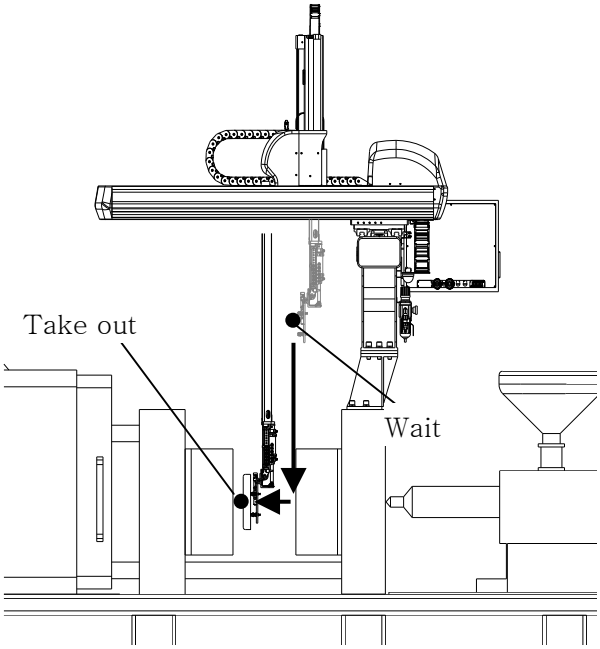

Position		
Each axes	Wait	TakeOut
Traverse	0 mm	0 mm
Main Arm Kick/Return	250 mm	400 mm
Main Arm Up/down	0 mm	1250 mm
Rotation	OFF	OFF

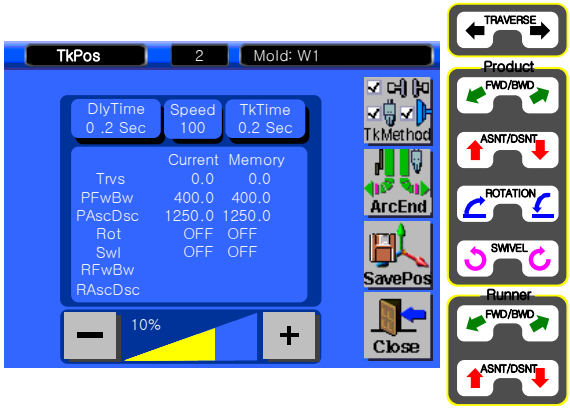

- **STEP 4**

[Take out, Traverse 0mm, Kick, 400mm, Up and down 1250mm, Rotation OFF]

Press manual to move robot arm to 400 PFWBW and PAscDsc to 1250.

Store current value by pressing 

.

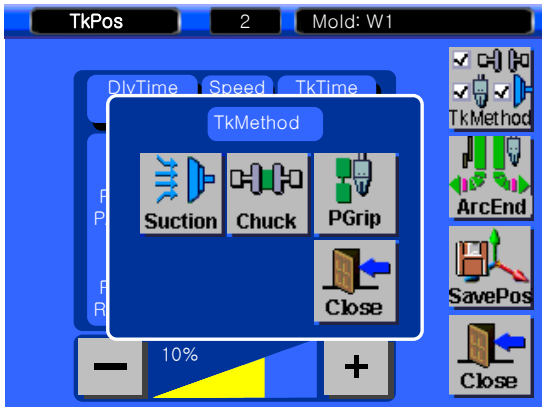

- **STEP 5**

[the Take-out Method as suction]

Pressing 

shows Take-out Method window,

and pressing 

sets up suction.

Pressing 

closes Take-out Method window.

Move to Step Setup screen by pressing 

.

4.7.3.2.1 Arc end position

(1) Description

Set end point in the section where product forward/backward and product ascent/descent are moving simultaneously while moving from Waiting Position to Take-out Position.

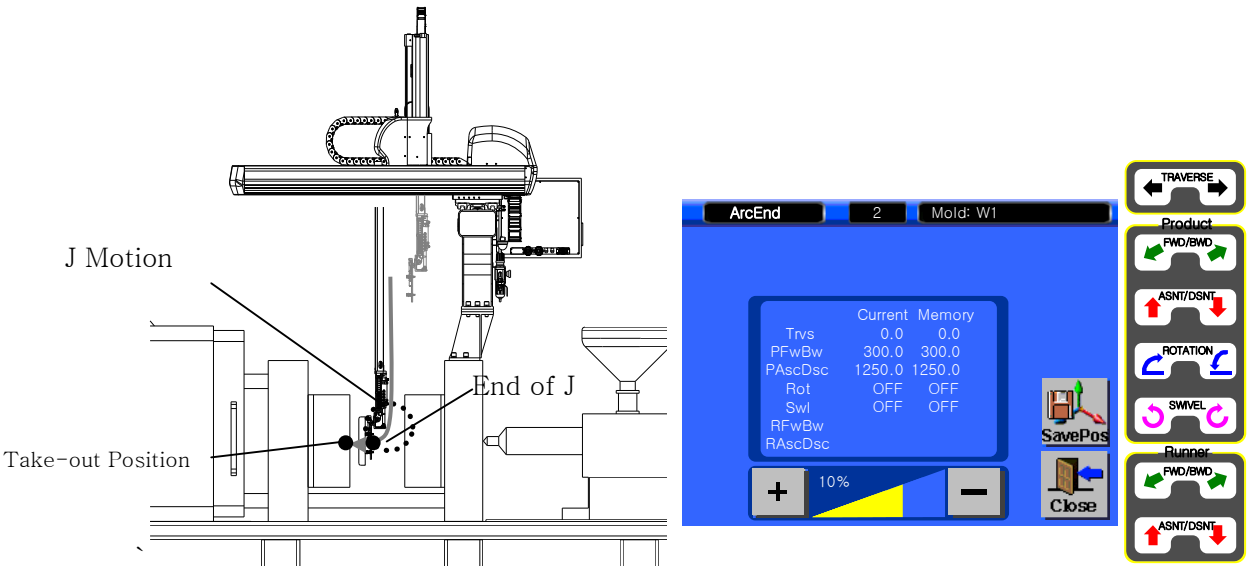

(2) Button Function

NO	Button	Description
1	SavePos	Save Current Position
2	Close	Close Screen.

(3) Example

To set up J or Arc Motion to move from waiting position to take out position,

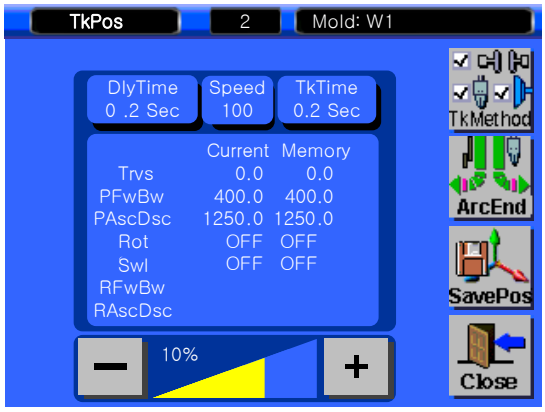

- **STEP 1**

Press  , move screen to end of Arc position

Position		
Each axes	Take-out Position	Arc End Position
Traverse	0 mm	0 mm
Main Arm Kick/Return	400 mm	300 mm
Main Arm Up/down	1250 mm	1250 mm
Rotation	OFF	OFF

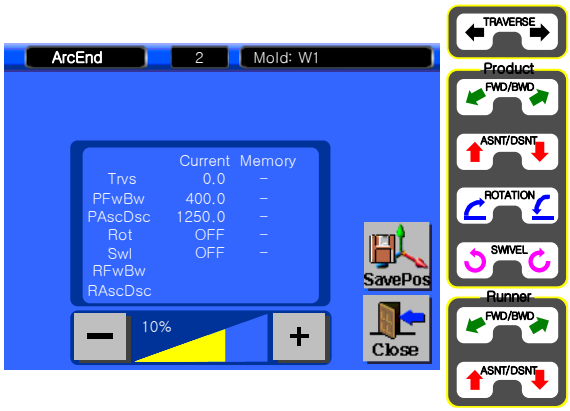

- **STEP 2**

Press manual to move robot arm to PFWBW becomes to 300.0

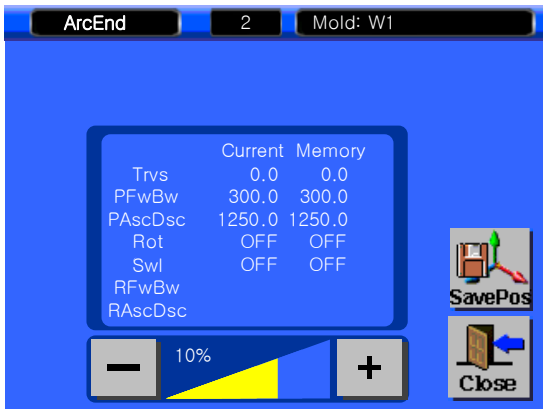

- **STEP 3**

Store current value by pressing 

.

Move to Take-out Position screen by pressing 

.

4.7.3.3 Ascent Position

(1) Description

This is ascent complete position after take out parts, this will allow molding machine to run next cycle (Mold will close)

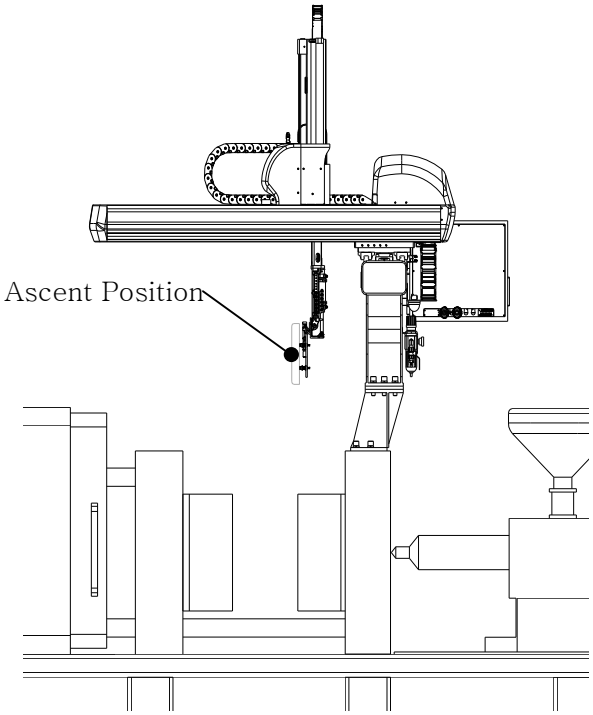

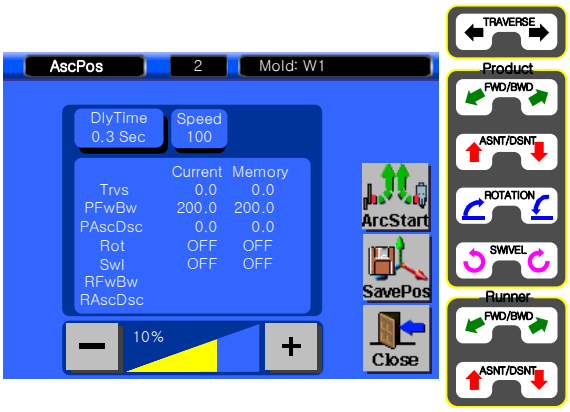

(2) Button Function

NO	Button	Description
1	DlyTime 00.0 Sec	Delay time before moving to Ascent Position [Input with numeric keypad]
2	Speed 000 %	Speed necessary for moving to Ascent Position [input with numeric keypad]
3	ArcStart	Move to Arc Start Position screen.
4	SavePos	Store current value.
5	Close	Move to Step Setup screen.

(3) Example

Delay time 0.3 Sec, Speed 100%, Move Robot arm from take out position to ascent complete position.

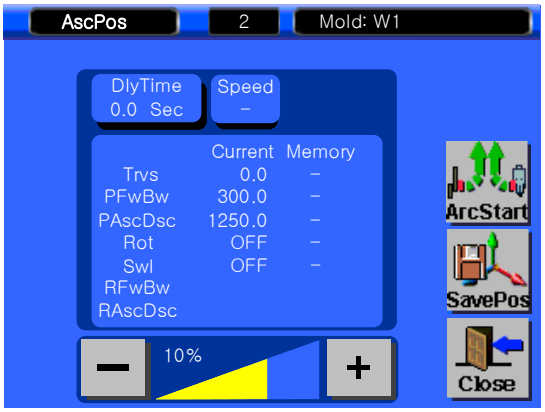

● **STEP 1**

[Delay time 0.3 Sec before motion]

Press [DlyTime 0.0 Sec], displays numeric keypad.

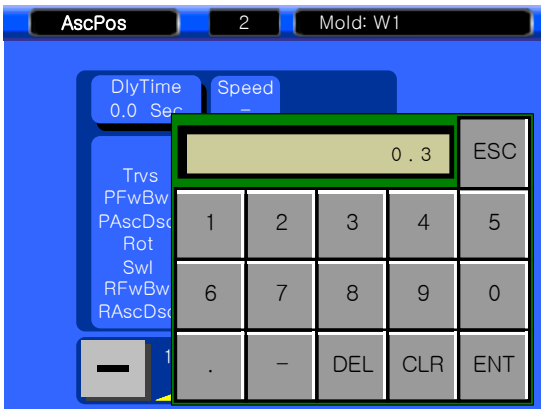

Press [0] [.] [3], [ENT] to save number and close.

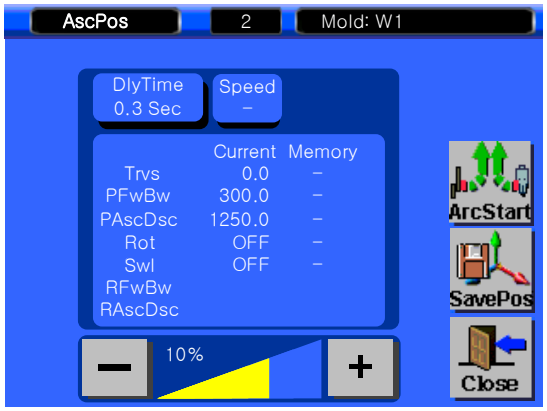

● **STEP 2**

Speed Setting 100%

Press [Speed –], displays key pad.

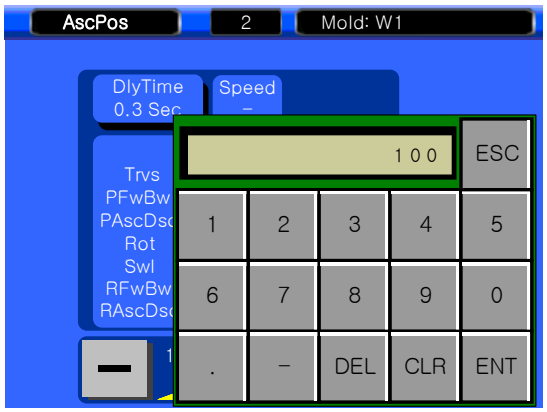

Press [1] [0] [0], Press [ENT] to save and close windows

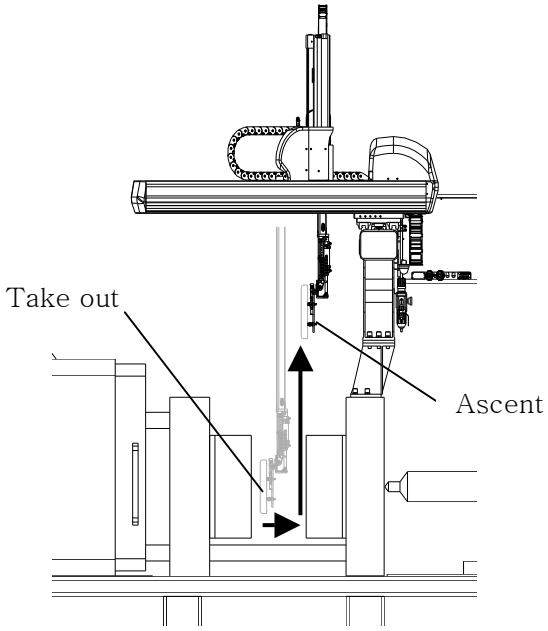

Position		
Each axes	Take out	Ascent
Traverse	0 mm	0 mm
Main Arm Kick/Return	300 mm	200 mm
Main Arm Up/down	1250 mm	0 mm
Rotation	OFF	OFF

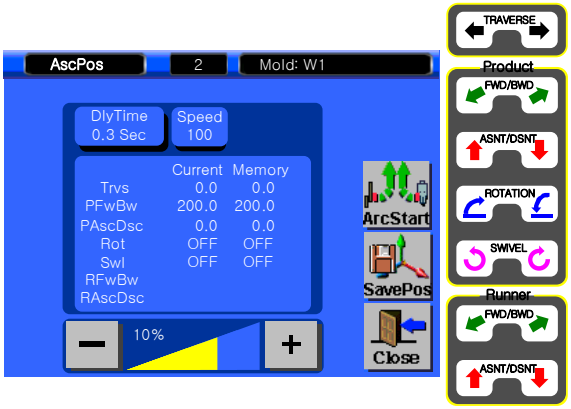

● STEP 3

[To setup ascent complete to Traverse 0mm, PFWBW(Kick) 0mm, Ascent 0mm, Chuck Rotation OFF]

Press manual so that current number of position becomes PFWBW 0.00, PASCDSC 0.00,

Press 

to save

Press 

to move to step setting screen.

4.7.3.3.1 J motion Start (Arc Start Position)

(1) Description

This sets up start point where Forward/backward Axis and Product Arm move simultaneously when moving from Take-out Position to Ascent Position.

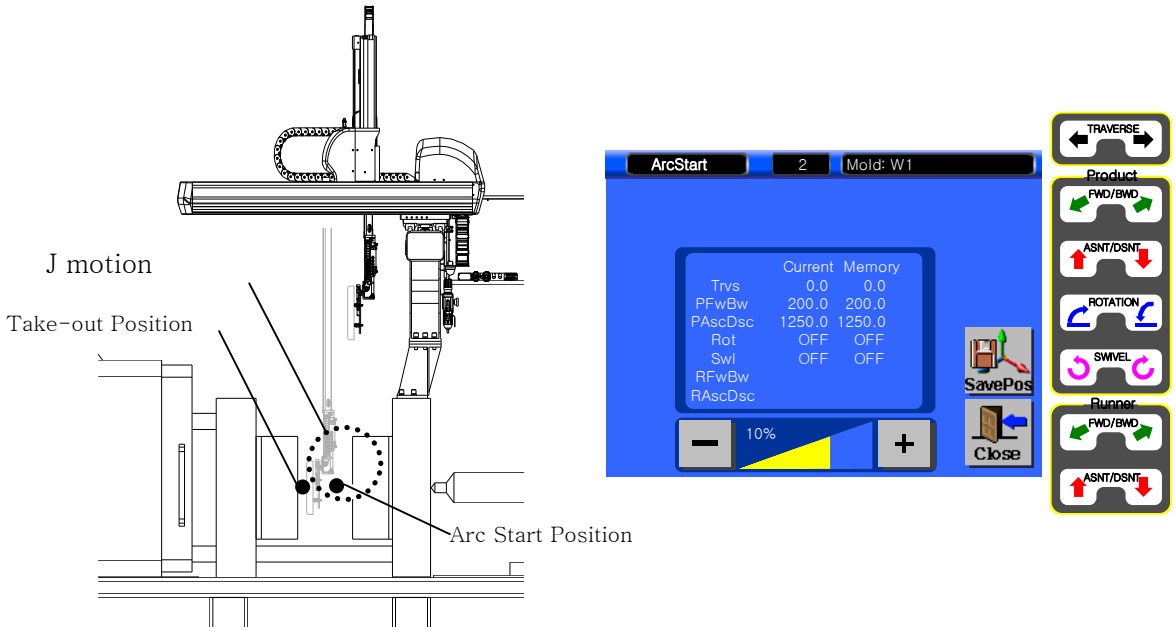

(2) Button Function

NO	Button	Description
1	SavePos	Store current value.
2	Close	Move to Ascent Position screen

(3) Example

Samples of creating J motion start point to move back to waiting position. Arc Start Positon.

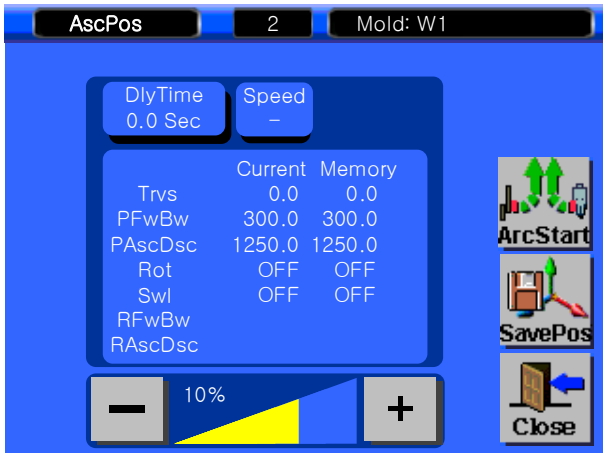

- **STEP 1**

Press  move to Arc Start Position.

Position		
Each axes	Ascent Position	Arc Start Position
Traverse	0 mm	0 mm
Main Arm Kick/Return	200 mm	250 mm
Main Arm Up/down	1250 mm	1250 mm
Rotation	OFF	OFF

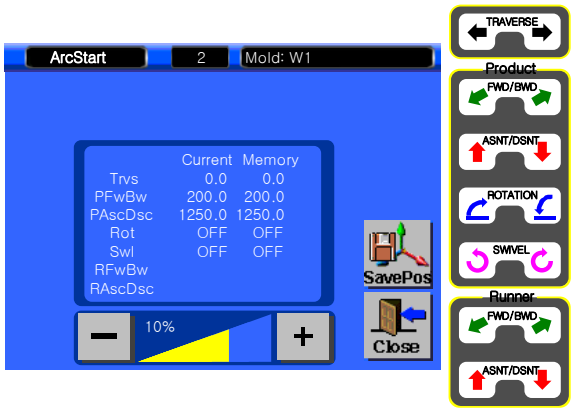

- **STEP 2**

Press manual to move robot arm to PFWBW to 250.0.

Press 

to save

Press 

to move to previous screen..

4.7.3.4 Release Position

(1) Description

This is for products release position setting screen. Consist of all release or staking features.

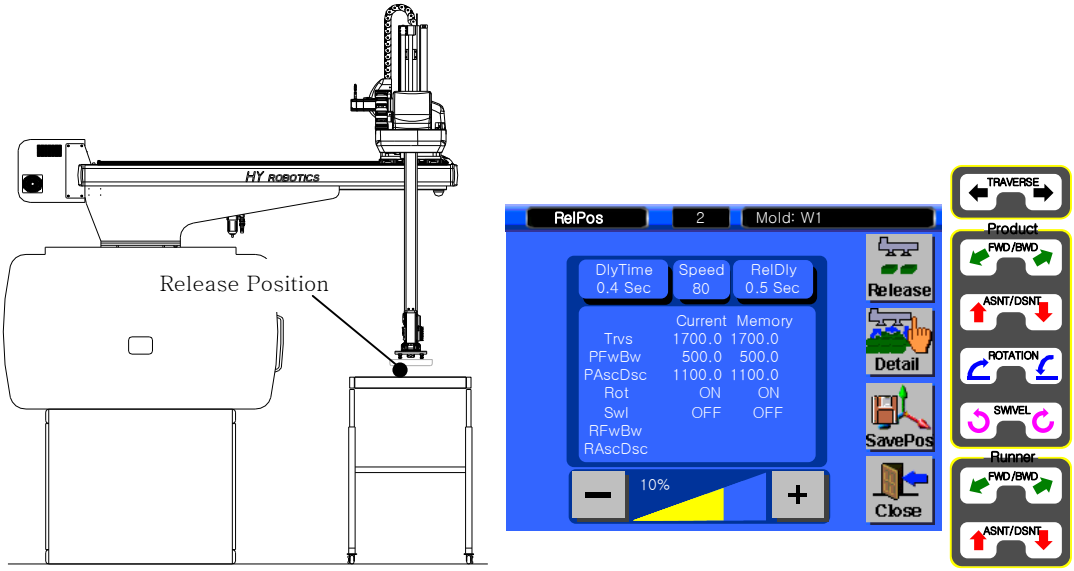

(2) Button Function

NO	Button	Description
1	DlyTime 00.0 Sec	This is delay time before moving to Release Position. [input with numeric keypad]
2	Speed 000	This is a speed necessary for moving to Release Position. [input with numeric keypad]
3	RelDly 00.0 Sec	This is delay time before opening product after moving to Release Position. [input with numeric keypad]
4	Release	Opens the take-out product.
5	Detail	Moves to Detail Setup screen.
6	SavePos	Store current value.
7	Close	Move to Step Setup screen.

(3) Example

In case of setting 0.4 second delay time, 80% moving speed, 0.5 second delay time before opening product, position from Ascent Position to Release Position.

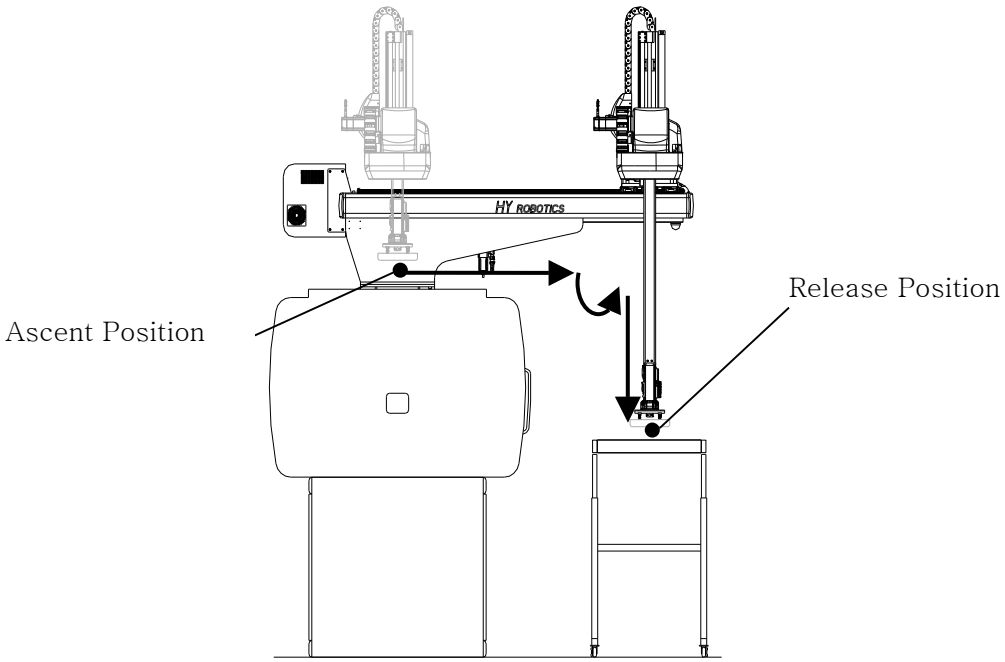

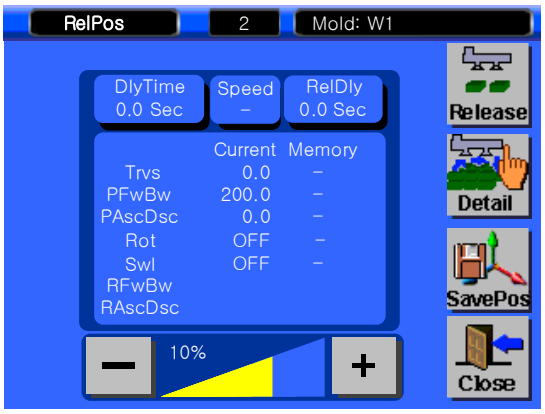

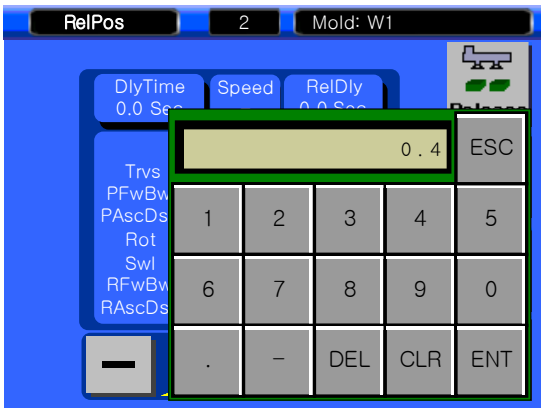

- **STEP 1**

[0.4 sec delay time before moving to Release Position]

In order to setting delay time before moving to Release Position, pressing [DlyTime 0 Sec] shows numeric keypad.

Make input by pressing [0] [.] [4] in regular order, store delay time by pressing [ENT], and then close window.

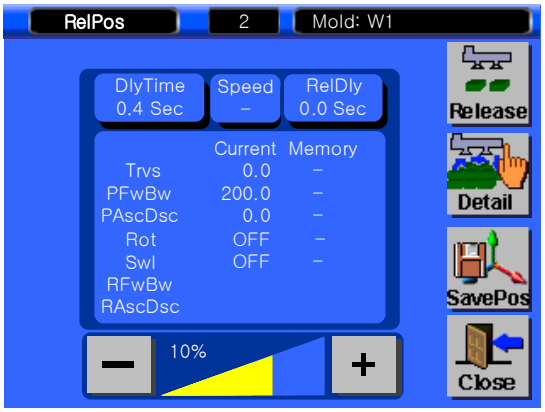

● STEP 2

Set up speed to 80%

In order to set up speed while moving to Release Position, pressing Speed – shows numeric keypad..

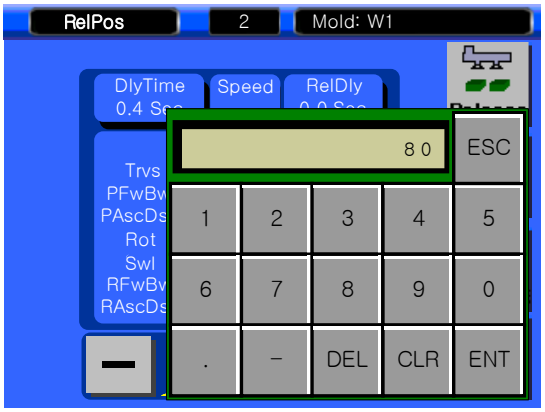

Make input by pressing 8 0 in regular order, store delay time by pressing ENT, and then close window.

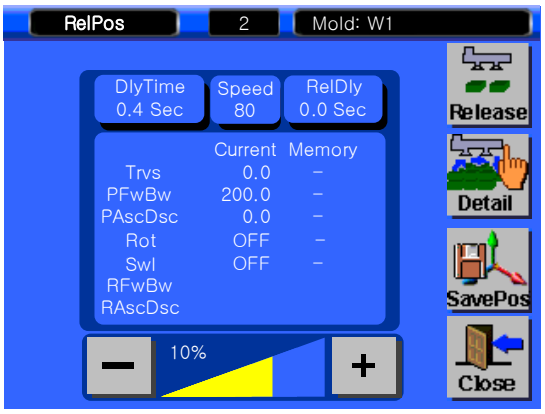

● STEP 3

Delay time 0.5 Sec

Press RelDly 0.0 Sec for set up, Delay time for release.

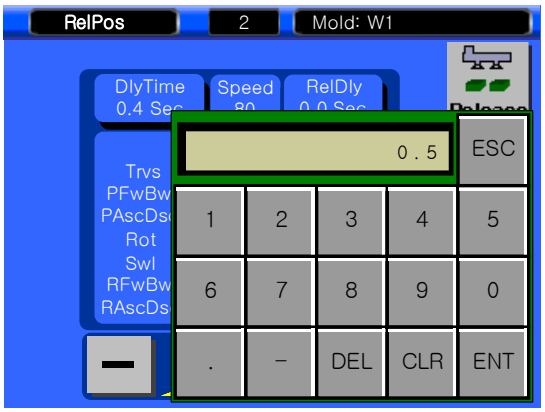

Make input by pressing 0 . 5 in regular order, store delay time by pressing ENT, and then close window.

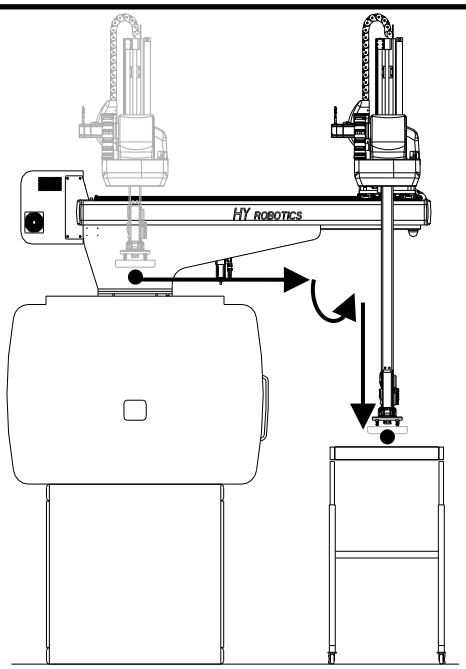

Position		
Axis	Up	Release
Traverse	0 mm	1700 mm
PFWBW	200 mm	500 mm
PASDS	0 mm	1100 mm
Rotation	OFF	ON

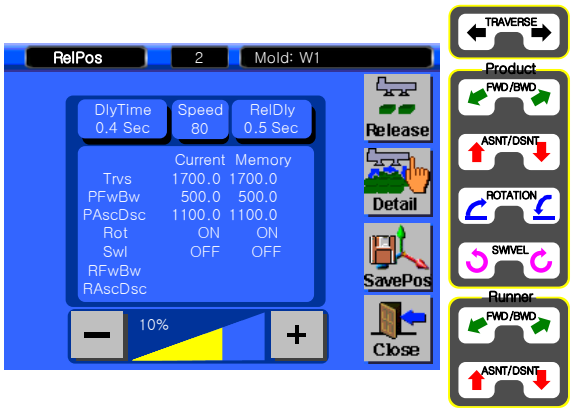

● **STEP 4**

Set release position to Traverse 1700mm, PFWBW(Kick) to 30mm, Up and Down to 1100mm, Chuck Rotation is on]

Press manual to Traverse 1700mm, PFWBW(Kick) to 30mm, Up and Down to 1100mm, Chuck Rotation is on

Store current value by pressing 

, and then

move to Step Setup screen by pressing 

.

Cancel the product by pressing 

.

Move to Step Setup screen by pressing 

NOTICE Traverse is possible only by completing ascent of take-out arm in C region.
Refer to [1.3.3 operation range]

4.7.3.4.1 Stacking Position Setting.

(1) Description

MainPos is for releasing parts to different position each cycle with Traverse, Kick, Up distance setting with layer. Pitch is for distance between each axis, Times is for layer for each axis.

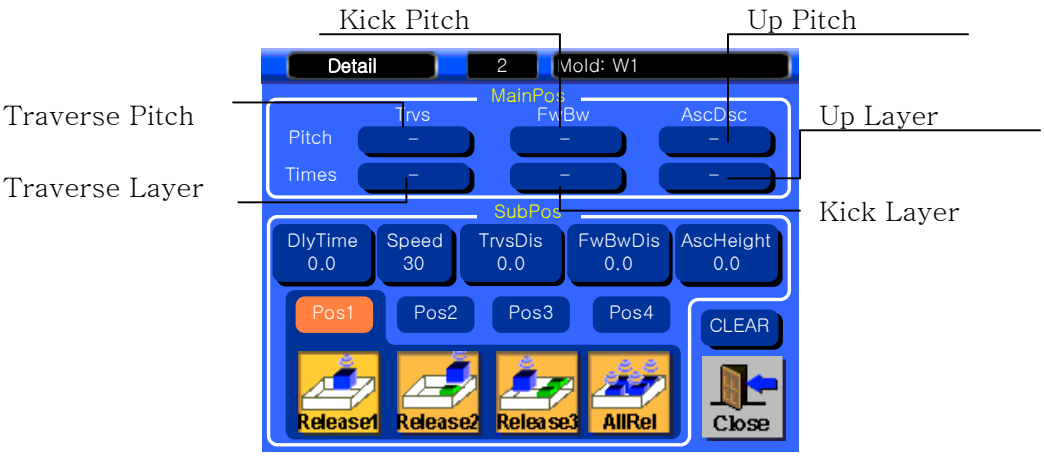

(2) Button Function

NO	Button	Description	Input
1	Traverse Pitch	Distance of Traverse for each cycle	Numeric Keypad
2	Kick Pitch	Distance of Kick for each cycle	
3	Up Pitch	Distance of Up for each cycle	
4	Traverse Layer	Setting layer for Traverse	
5	Kick Layer	Setting layer for Kick	
6	Up Layer	Setting layer for Up	
7	CLEAR	Clear	

(3) Example

Stacking a product to locate to 300 mm for Traverse Axis and 200 mm Kick Axis for each cycle. (2 x 2)

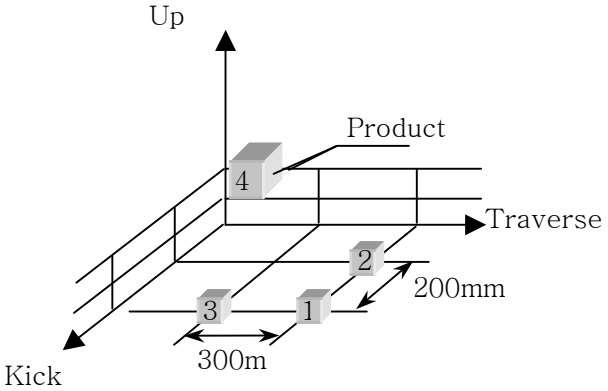

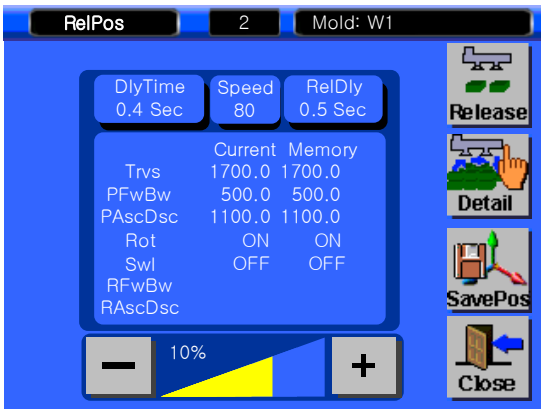

- **STEP 1**

Press  to set up detail stacking.

- **STEP 2**

① Input 300 in Pitch of Trvs

② Input 2 in Time of Trvs

③ Input 200 in Pitch of FwBw

④ Input 2 in Times of FwBw.

- **STEP 3**

Press  to close and save.

4.7.4 Delete Step

(1) Description

To delete created step or delete input information for 4 basic step.

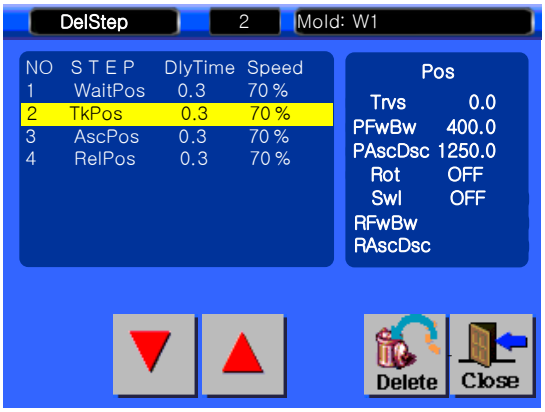

(2) Button Function

NO	Button	Description
1		Move cursor to below
2		Move cursor to up
3	Delete	Delete step on cursor. Current robot step can't be deleted 4 Basic step can't be deleted but only input information like position, timer)
4	Close	Close and move back to step screen.

(3) Example

- **STEP 1**

Press  to go to step delete screen.

- **STEP 2**

Press  or  to move cursor to step to delete

Press  , it will show " Delete Step ? "YES will delete and no to cancel

Press  to close

⚠DANGER	Please be careful to delete step, fully read instruction manual / contact factory or training person. Robot arm will move unexpectedly if step is deleted without careful motion movement consideration.

4.7.5 Grip Position

(1) Description

This is step to create insert gripping position , it has Delay time, Speed, Position, And insert grip delay time, Detail setting for insert grip.

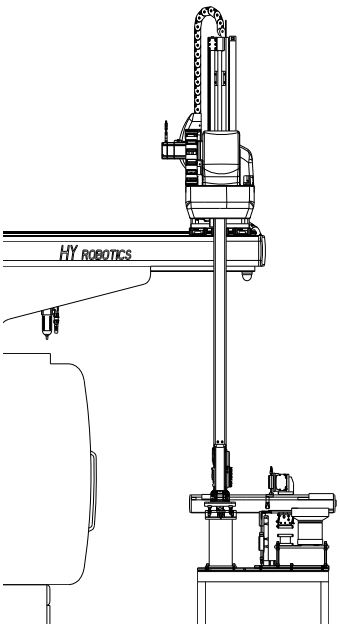

(2) Button Function

NO	Button	Description
1	Manual button	Manual Operation
2	DlyTime 00.0 Sec	Delay time to move to insert grip position.
3	Speed 000	Speed to move to insert grip position.
4	GripDly 00.0 Sec	Delay time is insert grip delay time
5	Detail	Stacked insert gripping
6	SavePos	Save.
7	Cancel	Cancel.
8	Close	Close.

(3) Example

For setting of Delay time 0.3 Sec. Speed 80%, move to Grip Position and 0.3 Sec for grip delay,

● **STEP 1**

[Grip Position Ad]

Press  move to Grip Position Fuction Setting.

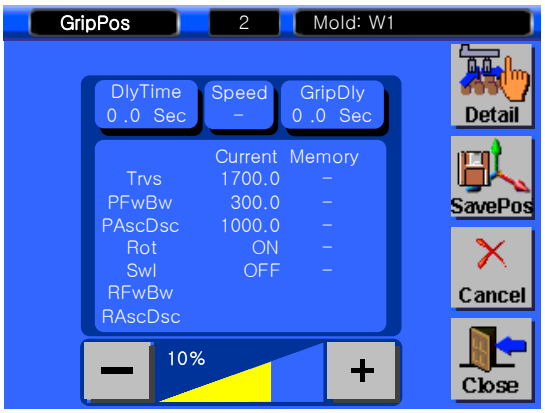

● **STEP 2**

[Set 0.3 Sec for delay time]

Press  to set up delay time.

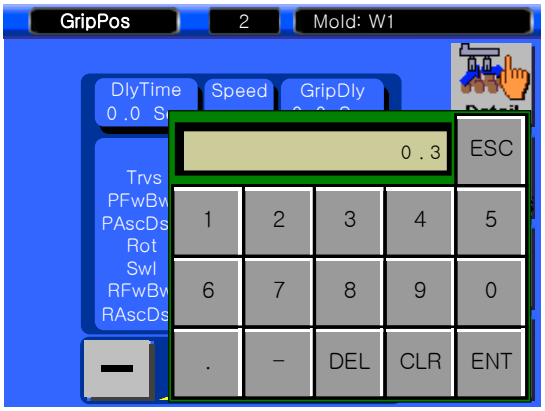

Press    , and pres  to save and close numeric keypad.

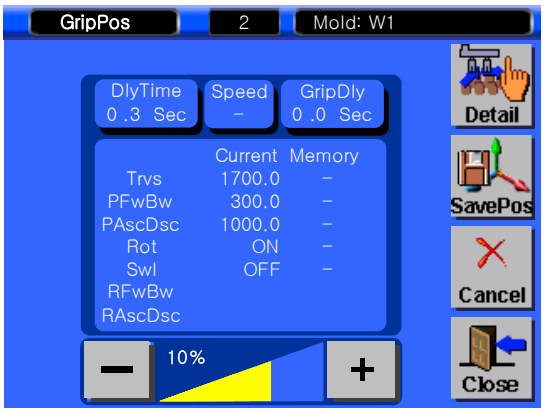

● **STEP 3**

[Set speed at 80%]

Press  for setting speed.

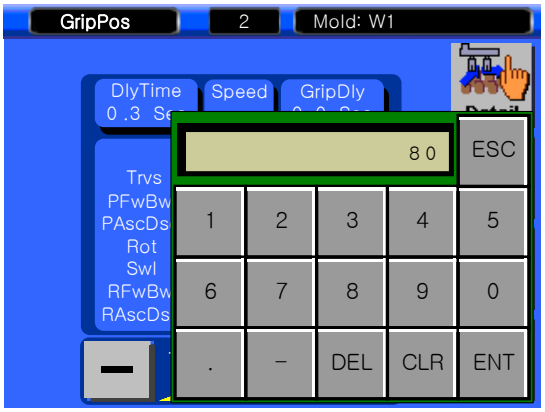

Press 8 0 and ENT.

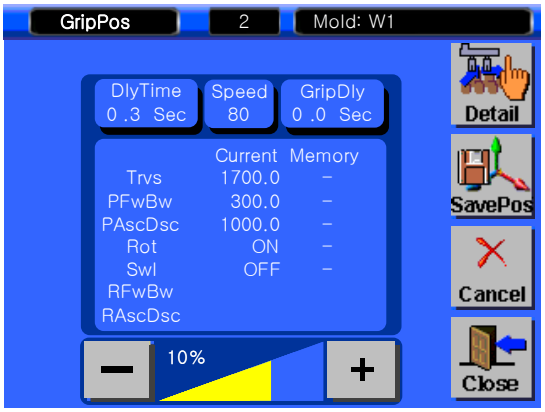

- **STEP 4**

[0.3 Sec Delay time for insert gripping]

Press GripDly 0 .0 Sec for numeric keypad.

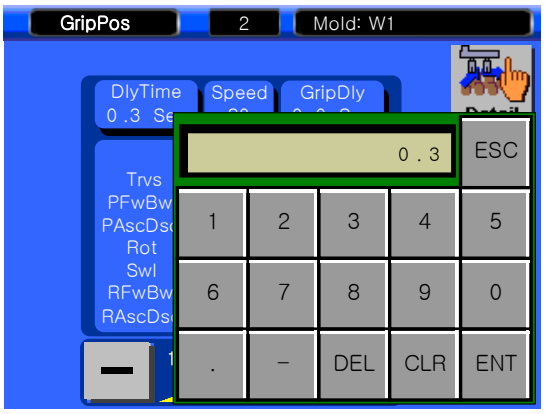

Press 0 . 3 and ENT

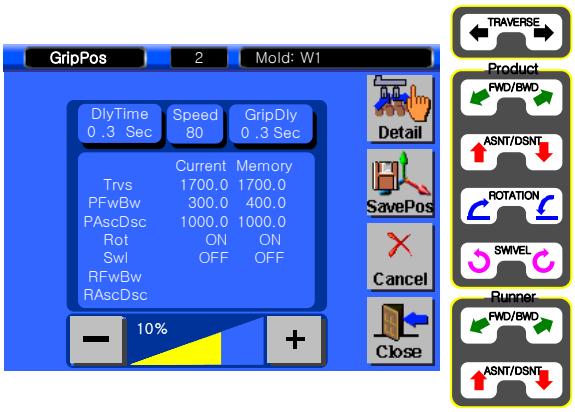

- **STEP 5**

[Traverse 1700mm, PFwBw 400mm, PAscDsc 1000mm, Rotation ON]

Press Rotation, press manual buttong to move robot arm to Traverse 1700mm, PFwBw 400mm, PAscDsc 1000mm, Rotation ON

Press SavePos to save current information.

Close Close to move back to step setting.

4.7.5.1 Stacked Insert Gripping

Flat Stacked (Row and Column) insert can be gripped with simple data input. MainPos is for Traverse x FwBw flat stacked layer with distance and times. SubPos is for when insert distance is different to insert in the mold.

(1) Description of Main Position

To grip insert stacked row and column (Flat)

MainPos is for gripping insert by row and column has pitch and times.

Times is for cycle operation. And pitch is for distance of each cycle.

(2) Button Function of Main Position

NO	Button	Function	Input method
1	Trvs Pitch	Traverse Pitch	Numeric Keypad
2	PfwBw Pitch	PfwBw Pitch (Kick)	
3	Trve Times	Traverse Times. (Cycle)	
4	PfwBw Times	Kick Times. (Cycle)	
5	CLEAR	Delete all information	

(3) Example of Main Position

Gripping insert from Traverse 35mm, Kick 35mm, 10 row, 14 column (on pallet)

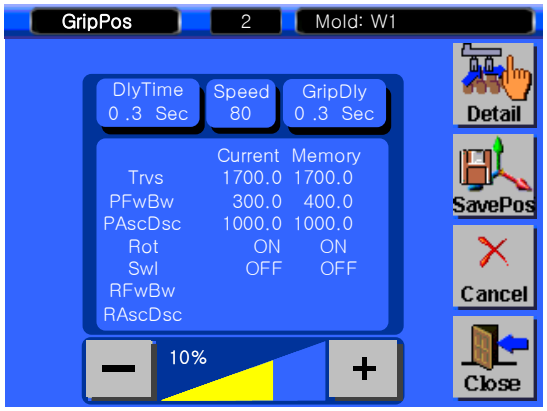

- **STEP 1**

Press  to move detail insert grip position.

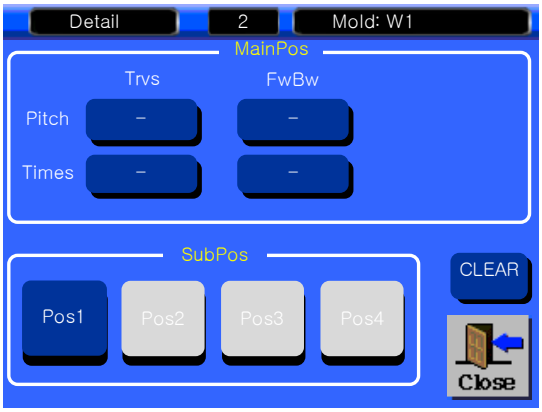

- **STEP 2**

[Input 35 in Pitch of Trvs, 35mm in Pitch of FwBw, 10 row 14 column]

Press [-] on Pitch of Trvs, input 35, Press [-] on Pitch FwBw input 35, Press [-] in Time of Trvs input 10, Press [-] in Times of FwBw input 14

- **STEP 3**

Press [Close] to save and close.

(4) Description of Sub Position

When insert position on pallet and insert position on mold is different.

Sub Position of insert grip has Pos1, Pos2, Pos3, Pos4. (Need to input order of 1,2,3,4)

(5) Button Function of Sub Position

NO	Button	Description
1	Pos1	Move to Pos1
2	Pos2	Move to Pos2
3	Pos3	Move to Pos3
4	Pos4	Move to Pos4

A. Position 1 screen

1) Description

Pos1 is for first gripping position, Up , Kick, Traverse position on Basic Grip position.

No possible to change, to change , need to be deleted.

Step Screen →

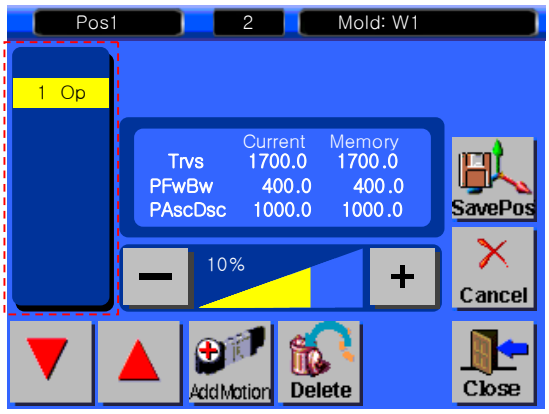

2) Button Function

NO	Button	Description
1	SavePos	Move robot arm with manual button and Save current position.
2	Cancel	Cancel save.
3	Close	Close screen.
4	AddMotion	Move to add motion screen.
5	Delete	Delete step on Sub Grip Position.
6	▼	Move cursor to below.
7	▲	Move cursor to up.

B. Position 2, 3, 4 screen

1) Description

This is for second, third, fourth gripping position, Traverse, Kick, Up position on Basic Gripping position (Can't be changed , required to delete).

Step Windows

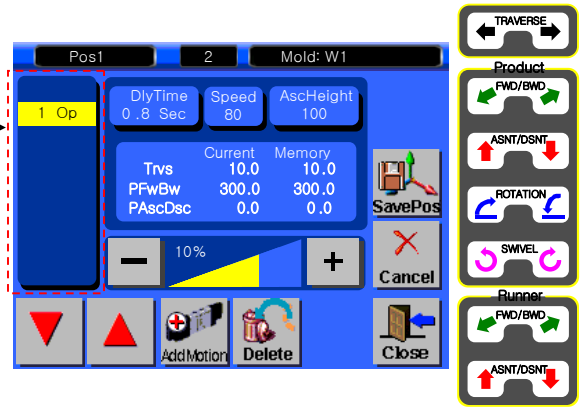

2) Button Function

NO	Button	Description
1	DlyTime 00 .0 Sec	Delay time input
2	Speed 000	Speed Input
3	AscHeight 000	AscHeight is for Up height to move grip position This is distance from Basic Gripping position. Input with numeric keypad.
4	SavePos	Save current positon.
5	Cancel	Cancel
6	Close	Close and move to previous screen.
7	AddMotion	Move to Add motion screen.
8	Delete	Delete step on cursor
9	▼	Move cursor to below.
10	▲	Move Cursor to up.

(6) Example of Sub Position

Example) 2 Insert located in Position 1 (Use Spare output 2) , and Position 2 (User spare output 3). Delay time 0.8 Sec, Speed 30%, Up height is 100mm.

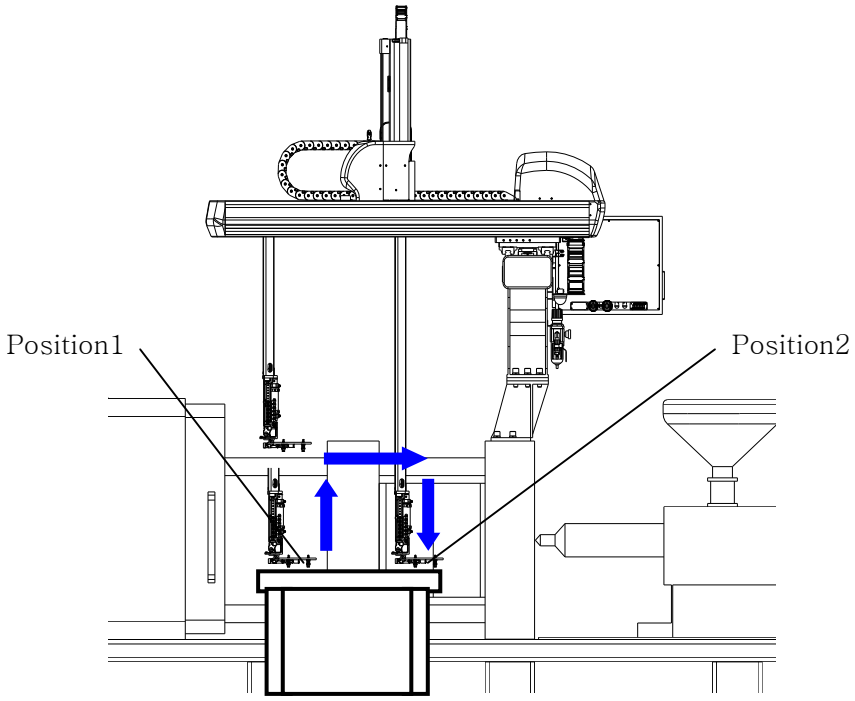

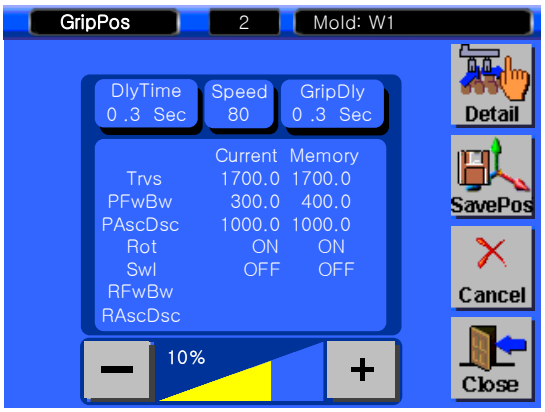

- **STEP 1**

Press  move to detail set up screen.

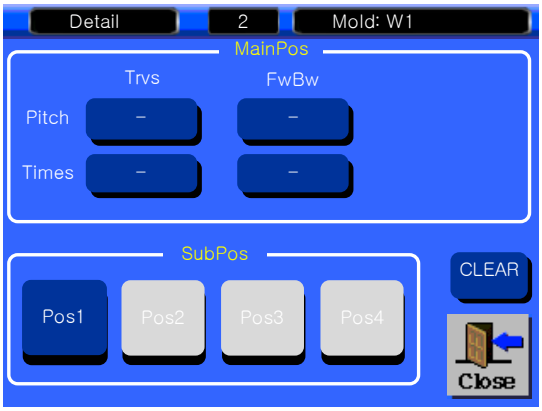

- **STEP 2**

Press  to move Pos1.

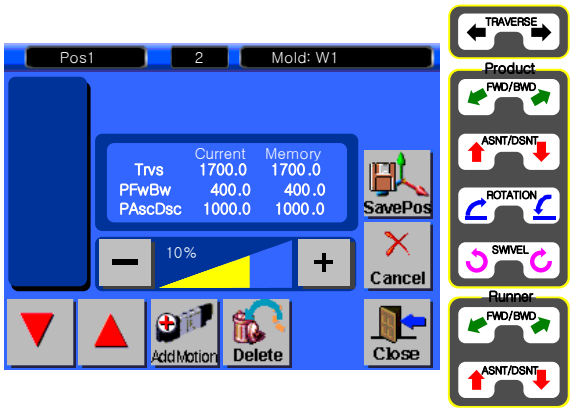

- **STEP 3**

Press manual button to find position.

And press 

to save Pos1.

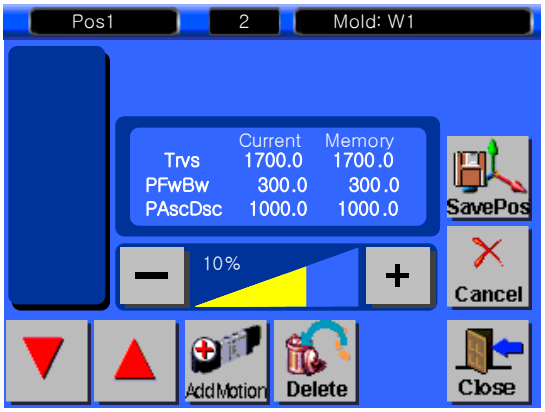

- **STEP 3**

Press 

to add motion.

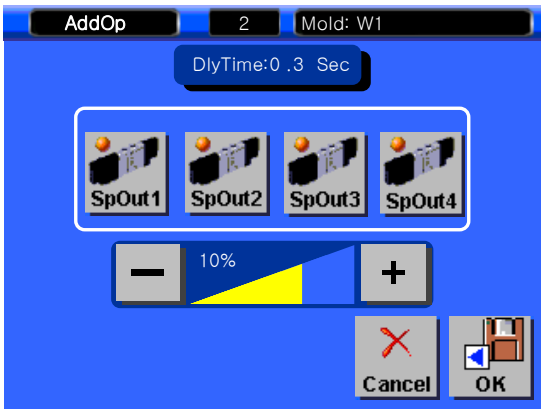

- **STEP 5**

Press 

, to use Spare output No.2

Press 

to save and move back to previous screen.

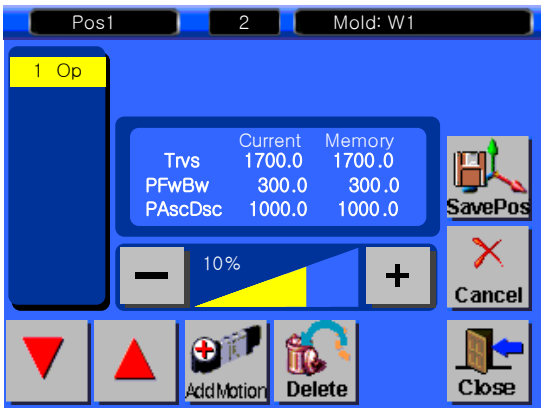

- **STEP 6**

Press 

to finish Pos1 setting.

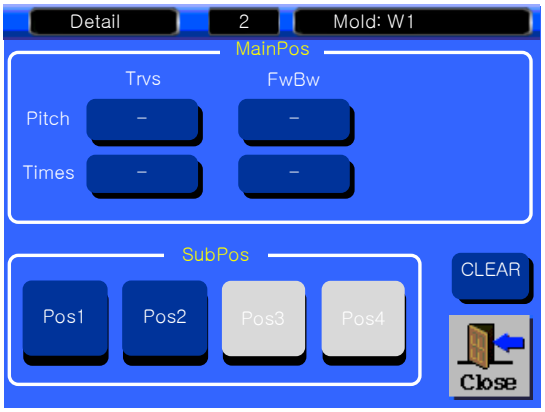

- **STEP 7**

Press  to set up Pos2

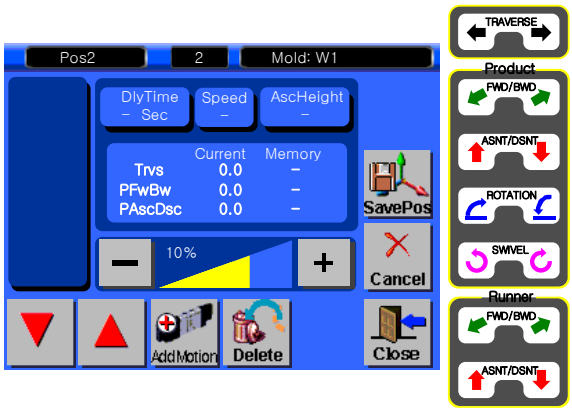

- **STEP 8**

Press manual button to find Pos2 Position

Press  to save.

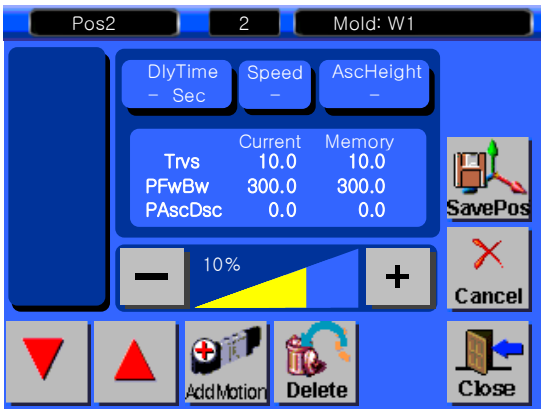

- **STEP 9**

Press  to use additional spare output motion.

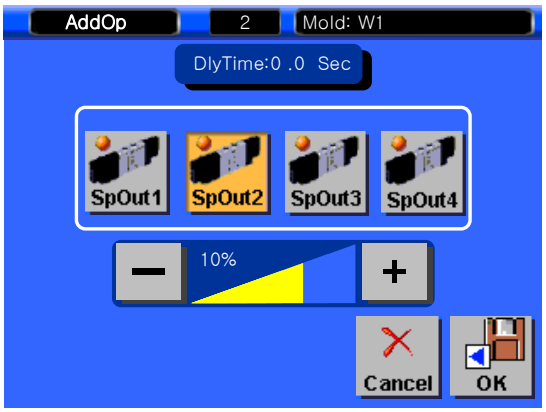

- **STEP 10**

Press  to use Spare output 3

Press  to move back to Pos2 Screen.

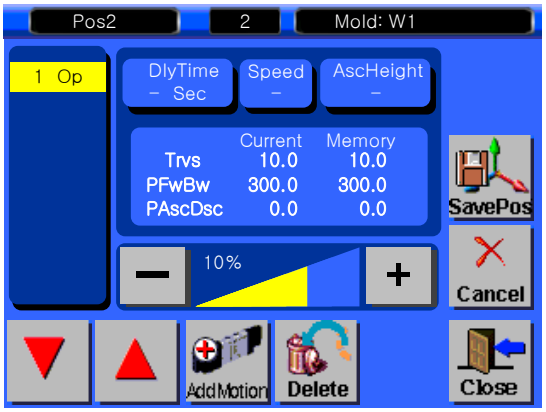

- **STEP 10**

Press DlyTime - Sec and input 0.3

Press Speed - and input 80

Press AscHeight - and input 100 mm.

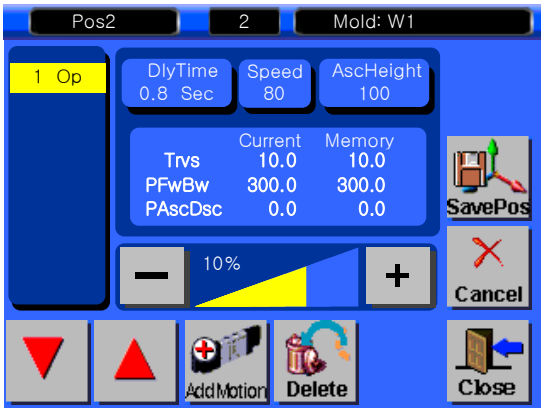

- **STEP 11**

Press Close to move back to screen.

- **STEP 12**

Press Close, move back to previous screen.

4.7.6 I/O View

(1) Description

Input, Output, IMM Interface signal can be confirmed with IN. OUT INT display

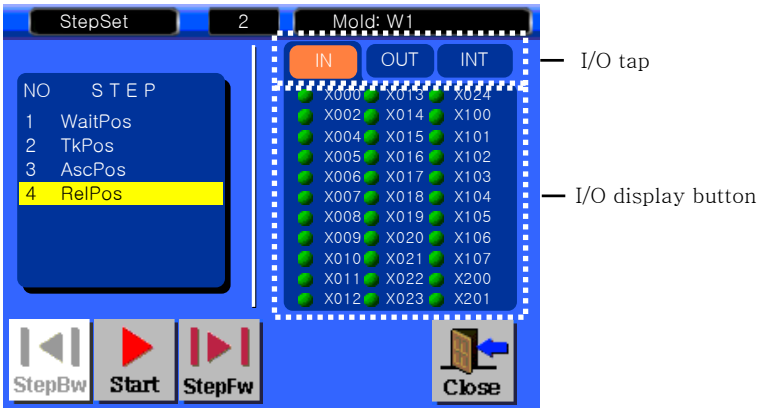

(2) Button Function [Ref 4.5.7 Manual]

NO	Button	Description
1	Close	Change to StepSet screen.
2	I/O tap	
3	I/O display button	

(3) Example

- **STEP 1**

Press  to move to Input/Output/Interlock check screen.

- **STEP 2**

 to close screen and move back to step screen.

4.7.7 Input

(1) Description

User input signal for waiting robot to go to next step.

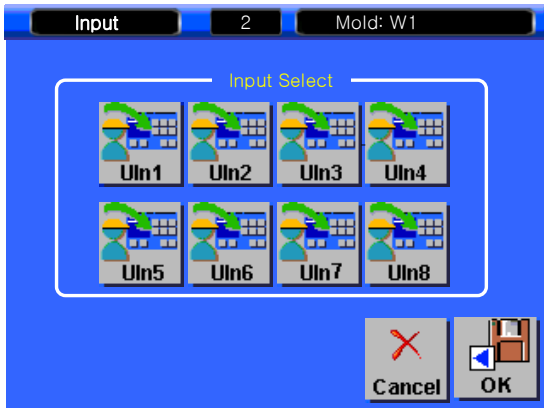

(2) Button Function

NO	Button	Description
1	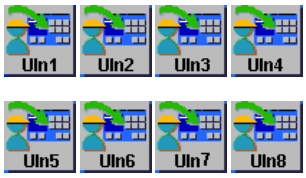	Select User input signal.
2		Cancel
3		Save and move back to previous screen.

(3) Example

When Robot wait for User input 1 and User input 2 and go to next step.

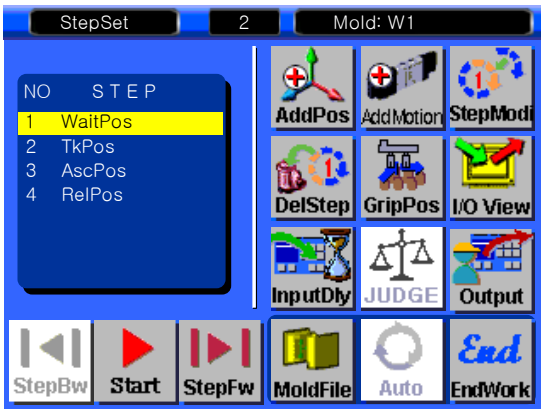

- **STEP 1**

Press InputDly icon.

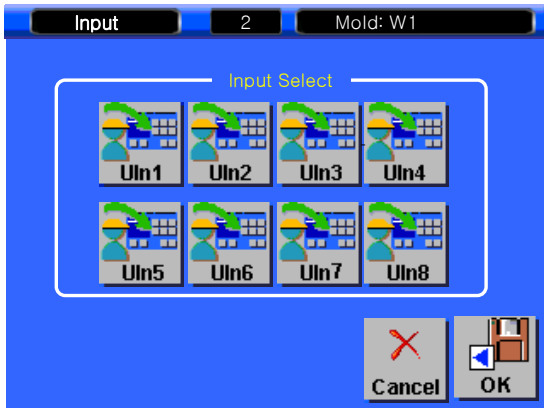

- **STEP 2**

Press  and 

Press  to save and go back to previous screen.

NOTICE Robot will wait all selected signal confirmed to proceed next steps

4.7.8 Output

(1) Description

User output signal On pulse, On Set and Off set.

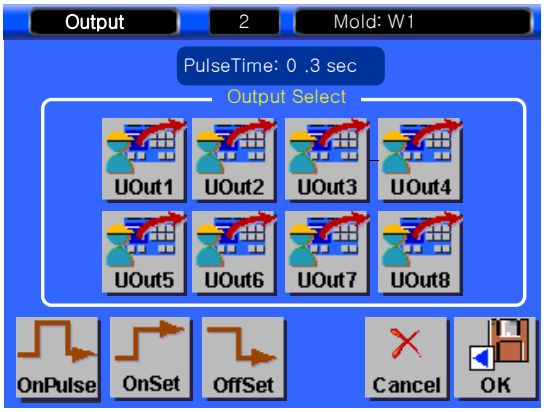

(2) Button Function

NO	Button	Description
1	UOut1 UOut2 UOut3 UOut4 UOut5 UOut6 UOut7 UOut8	Select User Output
2	OnPulse	Pulse Signal
3	OnSet	On Set signal until Robot command off within program.
4	OffSet	To turn off signal which is On Set within program
5	Cancel	Cancel
6	OK	Save and move to previous screen.

(3) Example

- **STEP 1**

Press  move to Output screen.

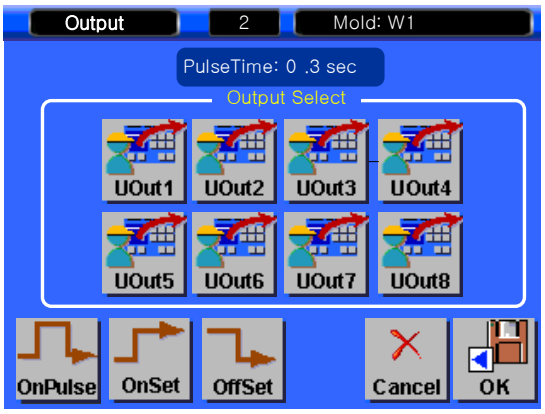

- **STEP 2**

Press  to call PulseTime: 0 .3 sec ,

input time with numeric keypad to pulse time

Press  to keep On until turn off.

Press  to off which is on.

Press  to save.

4.8 Auto Mode

(1) Description

This show automatic operation screen..

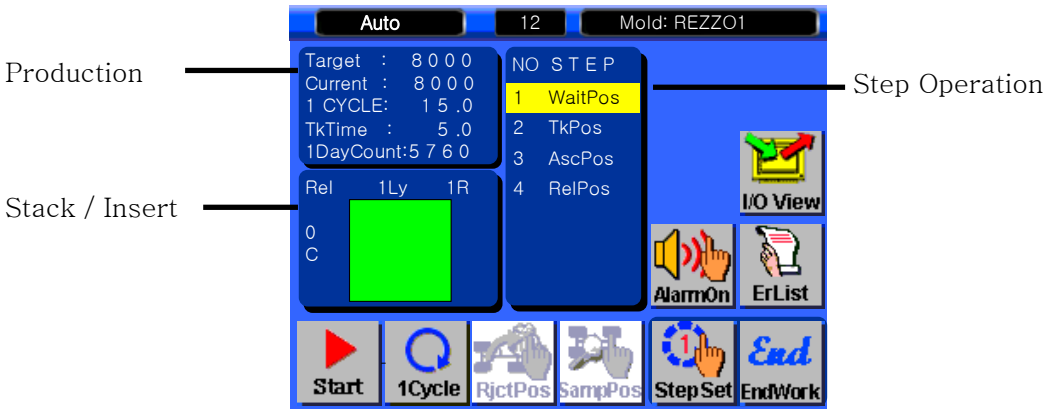

(2) Button Function

NO	Button	Description
1	Production	Display Targe, Current, 1 Cycle time, Take out Time, 1 Day Production, Touch this screen will move to Target screen.
2	Stac/Insert	Displays stacking and insert gripping information.
3	Step Operation	Display each Step Operation. Touch this screen will move to screen to change position, speed, time delay during automatic operation
4	Start	Start Auto Operationm
5	Pause	Stop Operation after finished step.
6	I/O View	Move to Input / Output Screen
7	AlarmOn	Alarm on/off selection.
8	ErList	Error History.
9	1Cycle	1 Cycle operation with Actual speed of Automatic
10	StepSet	Move to step setting screen.
11	EndWork	End and go to Mold Manager screen.

[Production]

Press Production icons show current information

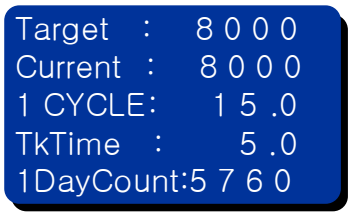

Target : Total Target Number (Robot will stop after reach this No.)

Current: Current Production Quantity

1 Cycle : 1 Cycle Operation Time (Sec)

TkTime: Take out cycle time (Sec)

1DayCount: 1 Day Production Quantity Estimation.

[Stack /Inset]

Displays Stack release and Gripper release information. Press touch screen will show others

Array

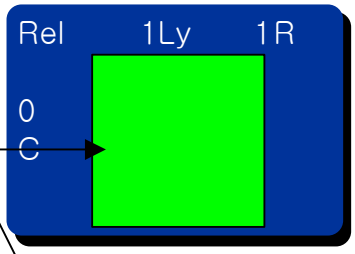

Stack Release: Display stacked products.

Number : Layer of Release Stack

Array display Row and Column of products stacked.

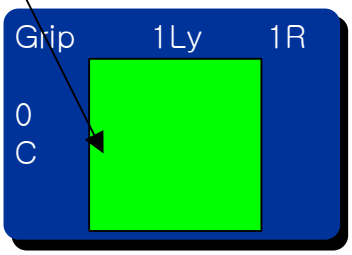

Insert Grip: Display Insert gripped Position

Array (Insert) : Display Row and Column of Insert Gripped by Robots.

4.8.1 Counter Set

(1) Description

Target Setting, Reset Production Quatity.

(2) Button Function

NO	Button	Description
1	Target: 0 0 0 0	Set Production Q'ty (input with numeric keypad) Continuious run with setting 0.
2	Cavity : 0	This is cavity of Mold (**Cavity**) Input with Keypad
3	PNTimes: 0 0 0 0	Production times is : Target / Cavity.
4	Reset	Reset
5	Close	Close and move to Auto Screen.

(3) Example

Ex) Set 8000 for Target

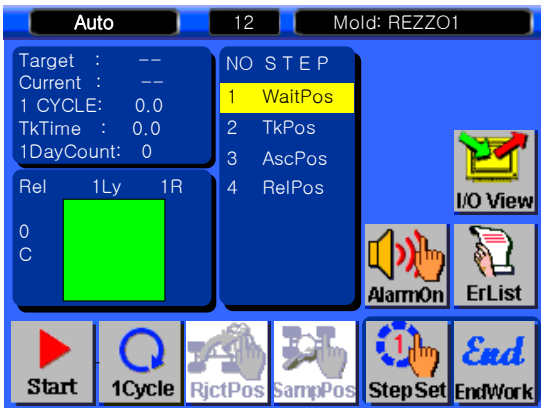

- **STEP 1**

Press

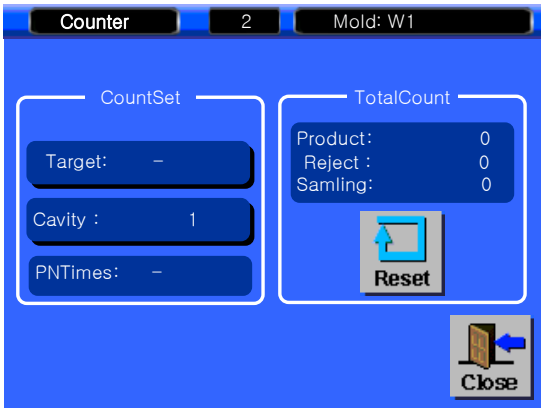

- **STEP 2**

Press Target: - and input 8000

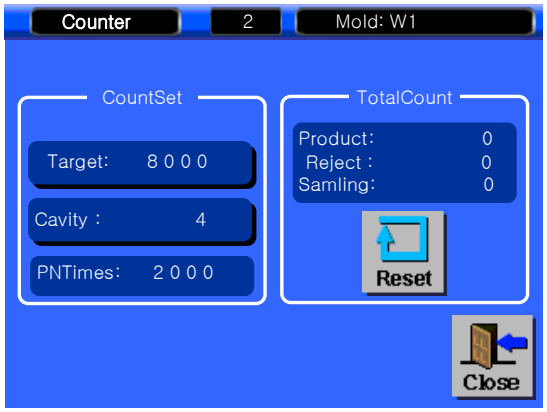

- **STEP 3**

Press 

, move to Auto.

4.8.2 Step (Position, Speed, Delay time) Modification in Auto

(1) Description

This screen is for changing speed, position, delaytime.

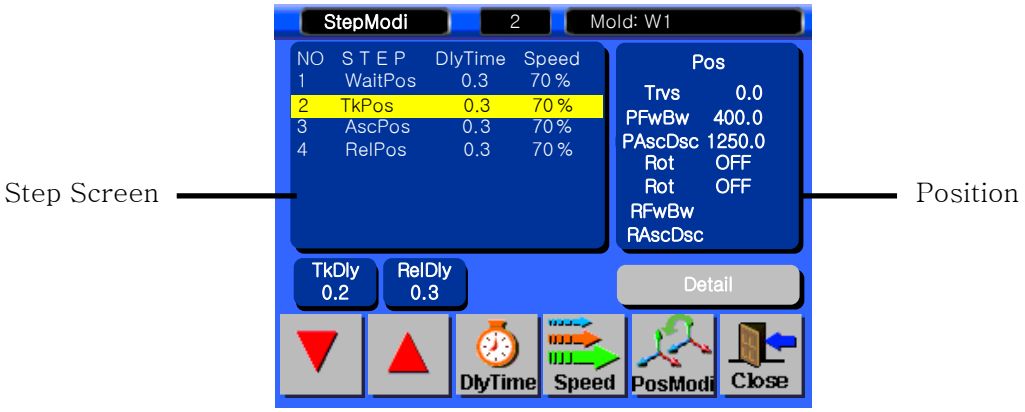

(2) button Function

NO	Button	Function
1		Move cursor to desired position
2		Set Delay Time
3		Set Speed
4		Set Position Modification
5		Close screen and move back to Screen

(3) Delay time and Speed Adjustment

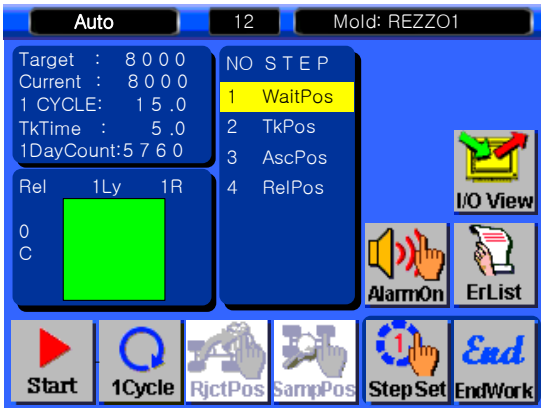

- **STEP 1**

Touch 

, move to modification screen.

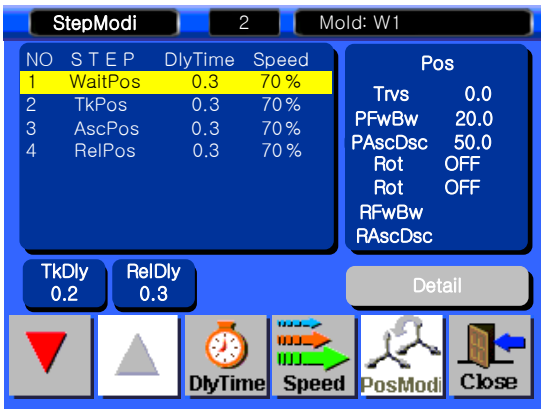

- **STEP 2**

Press  to move cursor.

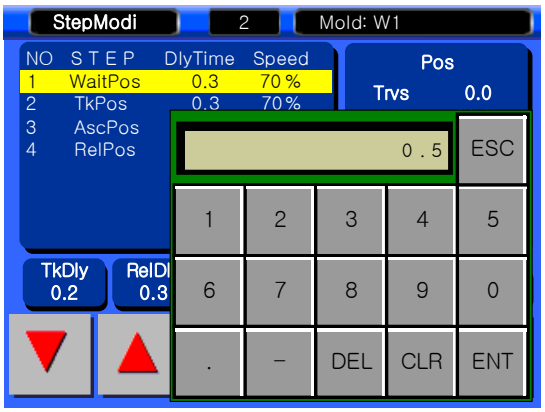

- **STEP 3**

Press 

,pop up numeric keypad, input delay time.

Press 

to change speed, input speed %

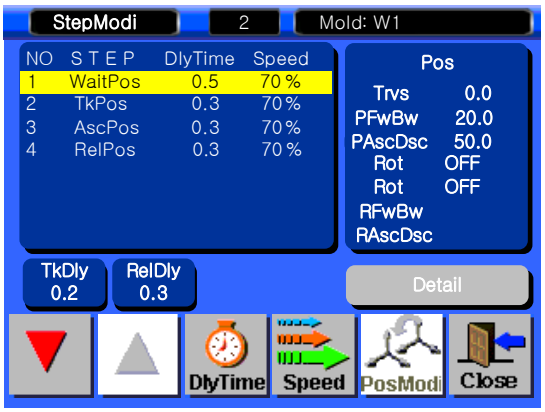

- **STEP 4**

Press 

move to Auto Screen.

(4) Position Modification method.

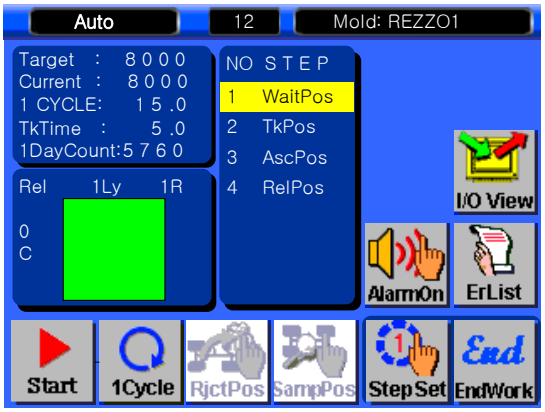

- **STEP 1**

Press 

, move to position modification screen.

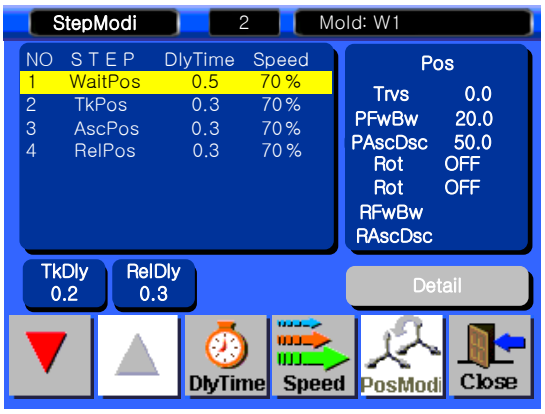

- **STEP 2**

Press  move cursor to desired step.

Press 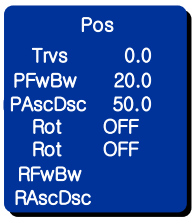

to activate position modification icons.

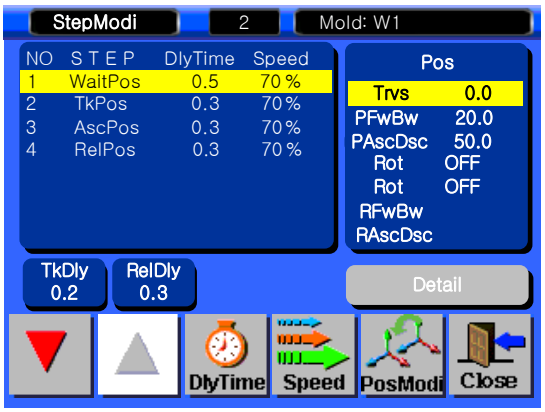

- **STEP 3**

Press  or  to move cursor to axis.

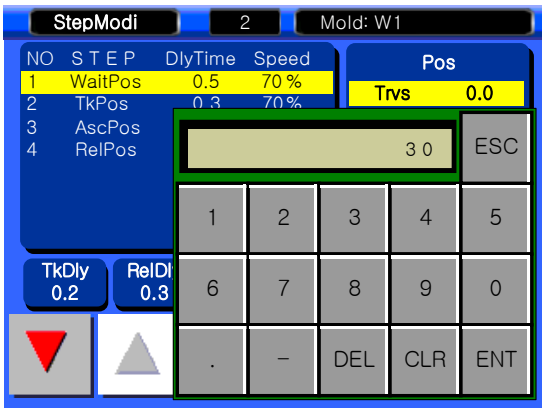

- **STEP 4**

Press 

shows key pad and change position.

Need to input absolute number and maximum is 100 mm.

(For examples Current Trvs is 1500, would like to change 1550, input 1550 with numeric key pad)

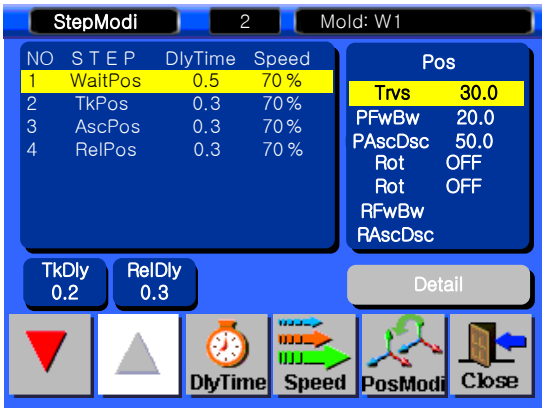

- **STEP 5**

Press  go back to Auto Screen.

> ⚠ **DANGER**
>
> When you change position change, do not go into robot motion area, if operator input wrong position or direction, robot operate motion which is not expected (press E-Stop for stop operation).

(5) Detail Release information change.

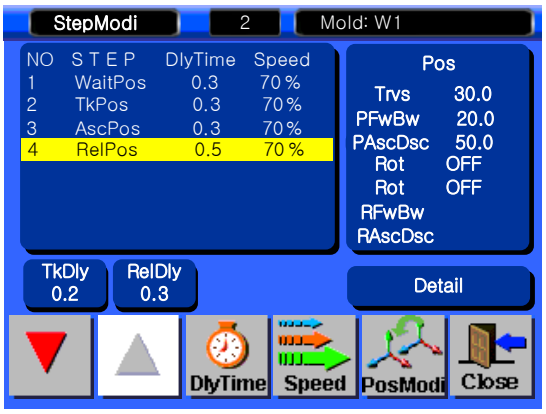

- **STEP 1**

Press  to change cursor of location.

Press  at RelPos

- **STEP 2**

Change detail information and Press

 to close.

Warning

* Changing detail information is not recommended during automation

5.Follow-up

5.1 Setup Motion

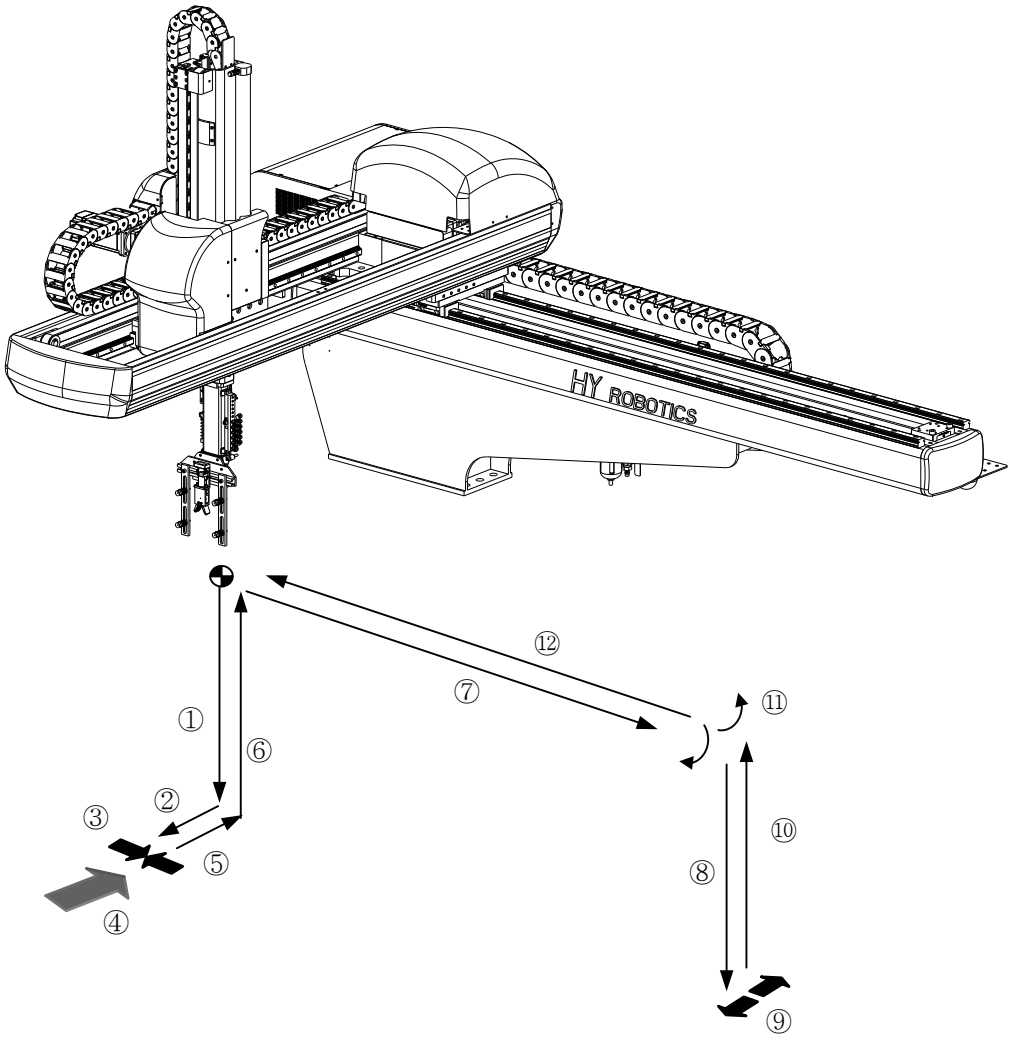

①. Waiting Position

②. Take-out Position

③. Ascent Position

④. Release Position

5.2 Start up

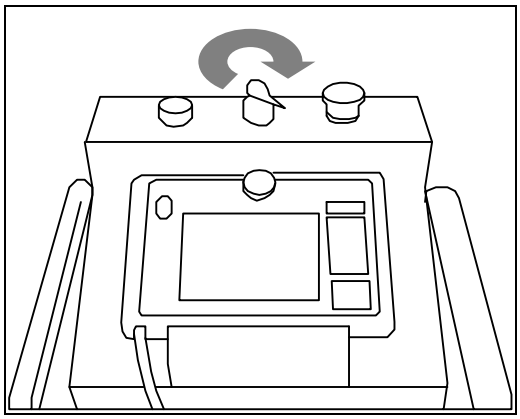

- **STEP 1**

Turn On Power.

Power lamp becomes on.

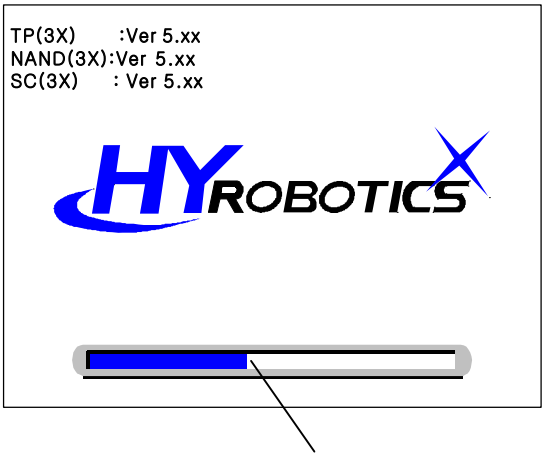

- **STEP 2**

Log screen appears, and loading state bar indicates data loading level.

In case loading state bar is all full, move to origin searching screen.

5.3 Searching Origin

NOTICE

Confirm Robot is not interfere with any obstacle.

Move robot arm with manual button.

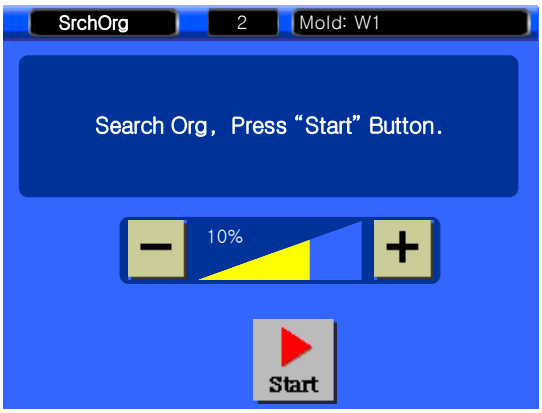

- **STEP 3**

Confirm Robot is not interfere with any obstacle and

Press 

to homing position

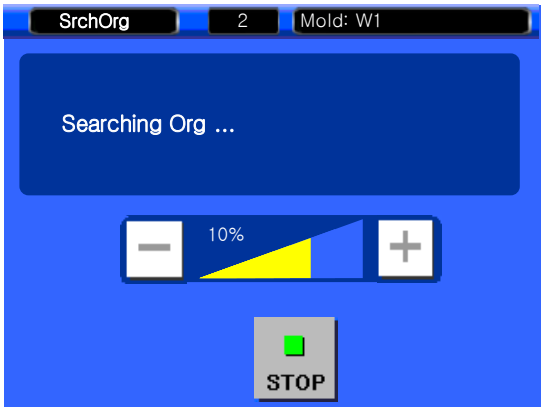

After finished homing, robot will back to main screen.

5.4 Creat New mold

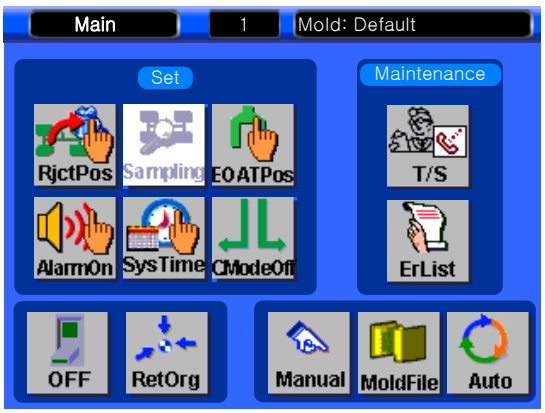

- **STEP 4**

Press  to set up mold.

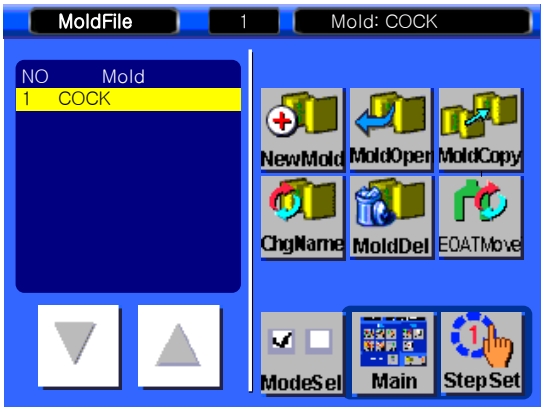

- **STEP 5**

Press  to creat new mold.

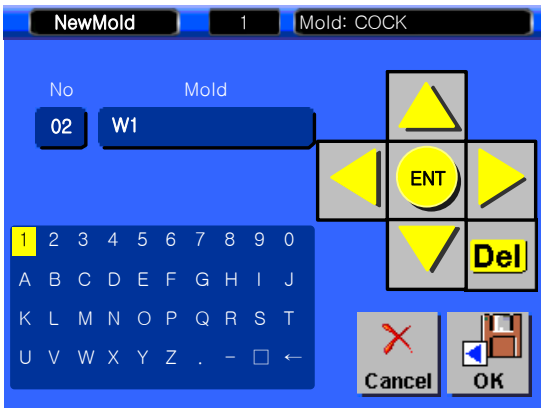

- **STEP 6**

Press 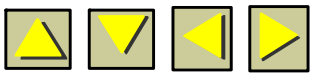 to move cursor to desired text, press  to input.

Press  to move back to mold manager screen.

5.5 Step Setting.

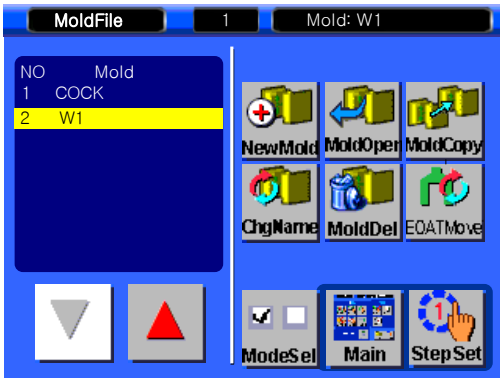

● **STEP 7**

Press  to move to Step Setting screen.

● **STEP 8**

Press  to Forward [No Setting of position]

Display if there is no information.

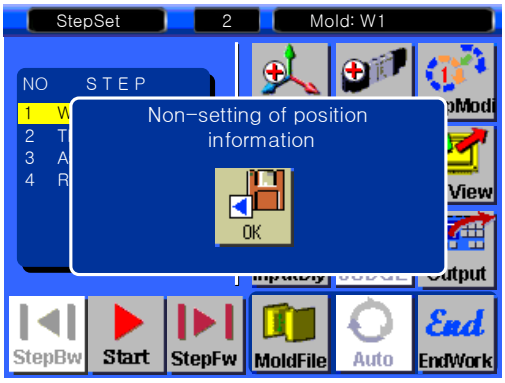

Press  to close.

● **STEP 9**

Cursor moved to WaitPos..

Press  to input WaitPos (Waiting Position)

Wait Position is only can be changed Step Modification.

5.6 Setting Waiting Position

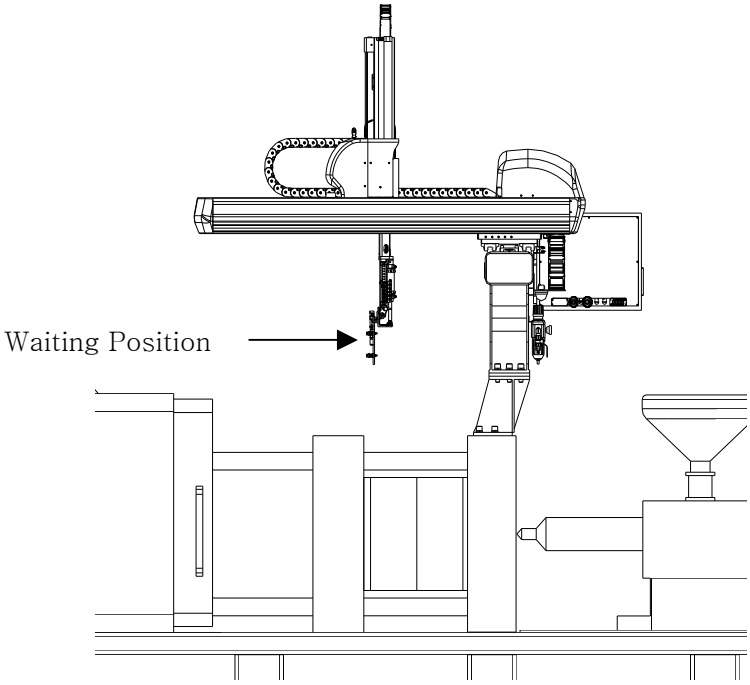

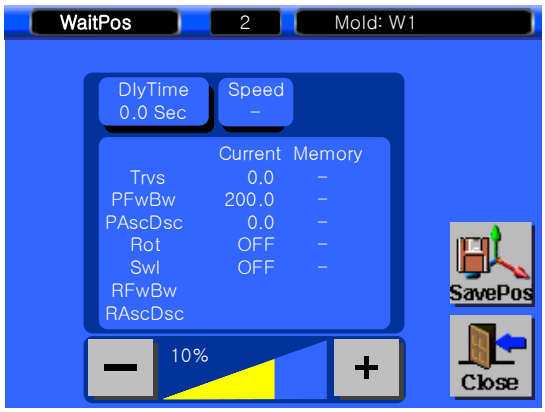

- **STEP 10**

[Delay time 0.3 Sec before move to Waiting Pos,]

Press DlyTime 0 .0 Sec and display numeric keypad.

(This is for delay time from last step to current step)

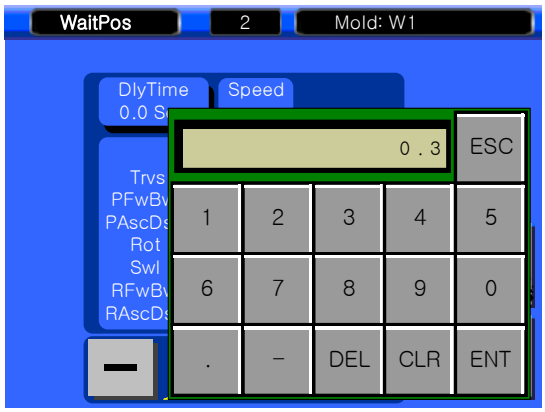

Press 0 . 3 , Press ENT to save and close.

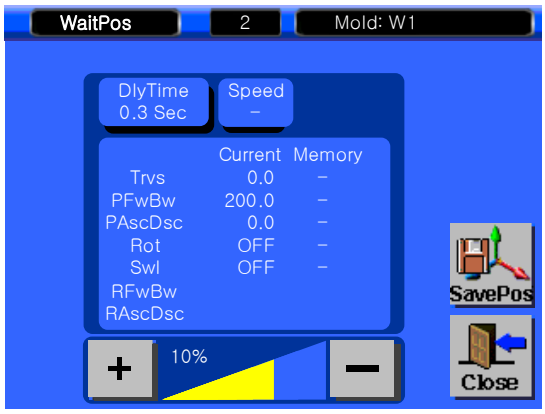

● STEP 11

[Speed Setting 70%]

Press Speed – to input Speed Setting.

100% is maximum speed.

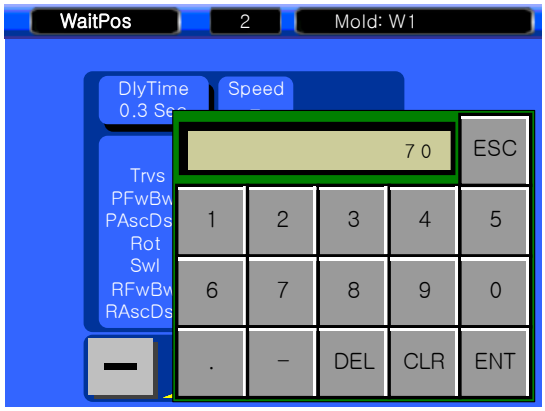

Press 7 0 , Press ENT to save and close windows.

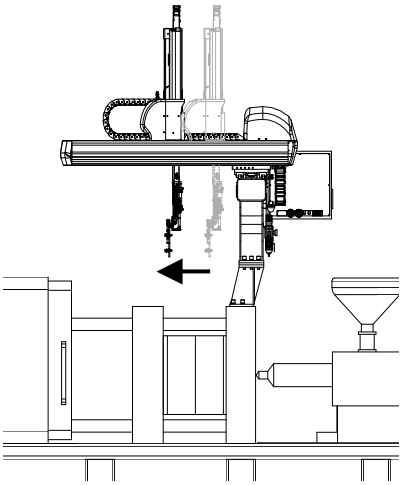

Position		
Axis	Origin	Waiting
Traverse	0 mm	0 mm
PFwBw	200 mm	250 mm
PAscDsc	0 mm	0 mm
Rot	OFF	OFF

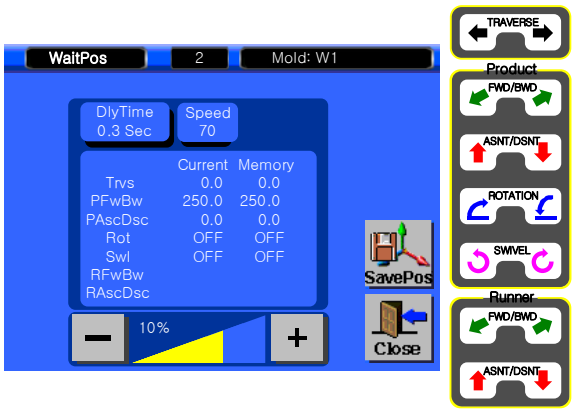

● STEP 12

[Setting Waiting Position to Traverse 0mm, Kick, 250 mm, Up and Down is 0 mm, Rotation OFF로 설정]

Move robot arm with manual button until you get current position as desired number and press

to save and close.

5.7 Take Out Position Setting

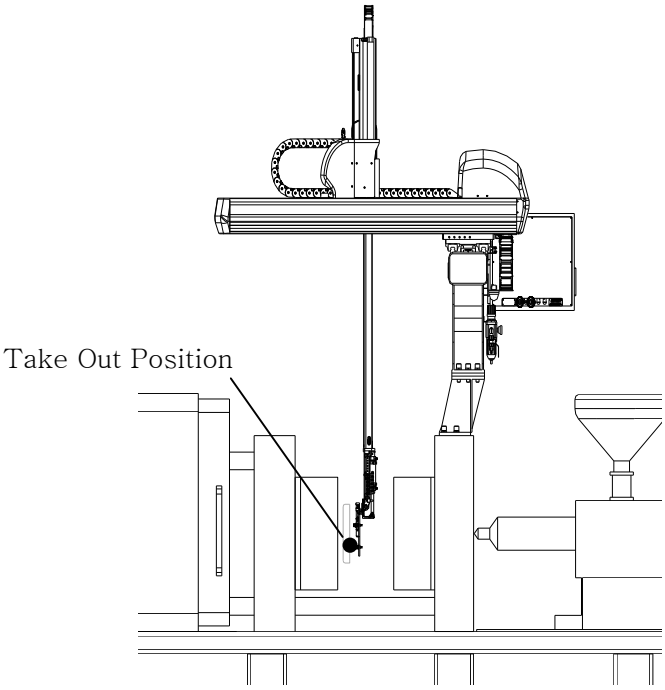

- **STEP 13**

Press  and display Non Data Setting..

Press  to close

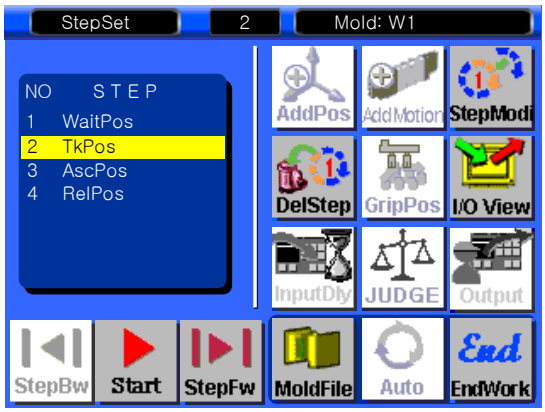

- **STEP 14**

Step Cursor moved to TkPos

Press  and move to set up Take out position

Take out position can be set up in Step Modification.

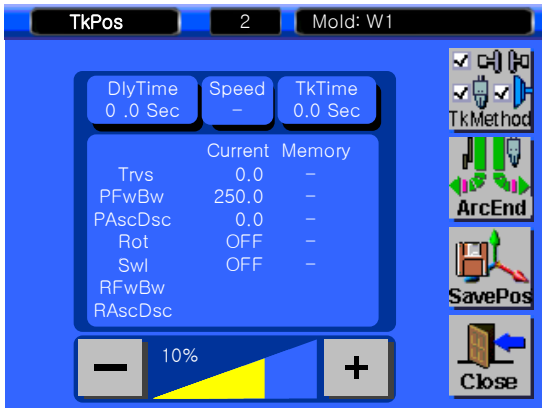

● STEP 15

[Set Delay Time to 0.2]

Press DlyTime 0 .0 Sec to have delay time after mold is open.

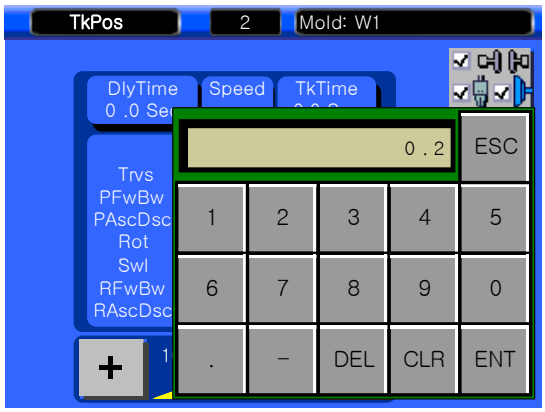

Press 0 . 2 and Press ENT to save.

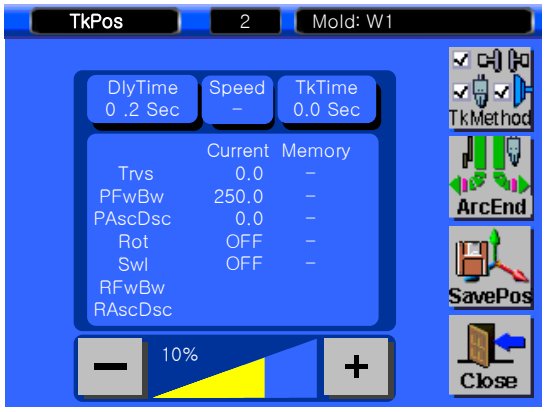

● STEP 16

[Speed 100%]

Press Speed –

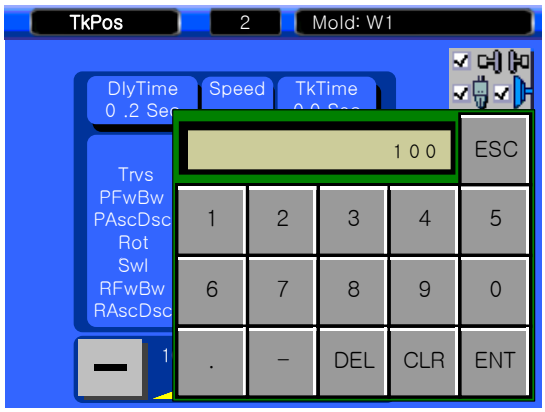

Press 1 0 0 to set speed 100%, Press ENT to save and close.

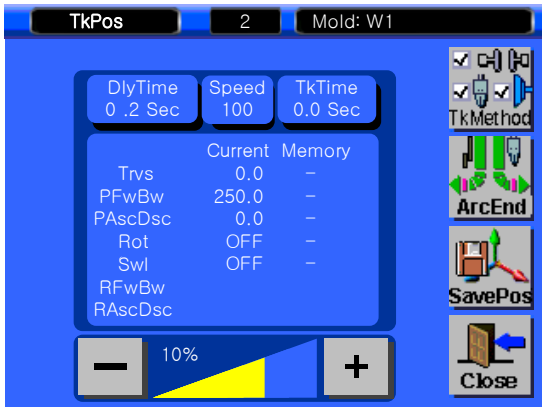

● STEP 17

[Take out Time Delay]

Press TkTime 0.0 Sec to have delay time to take out operation.

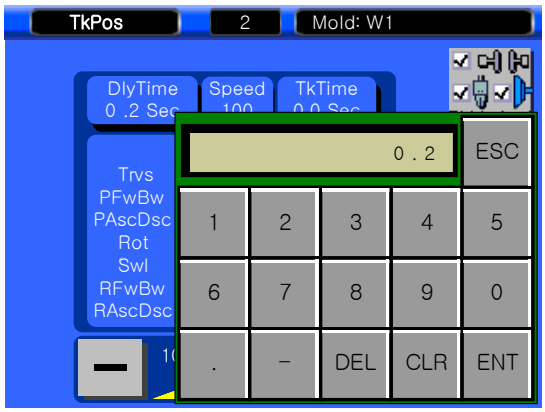

Press 0 . 2 , Press ENT to close.

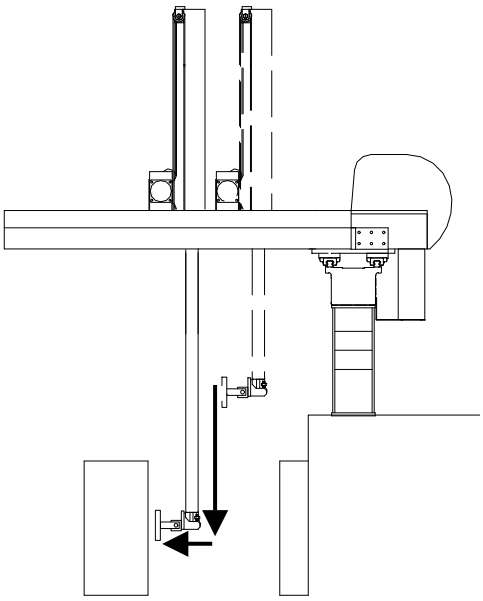

Position		
Each Axis	Waiting Position	Take out Position
Traverse	0 mm	0 mm
Kick	250 mm	400 mm
Up/Down	0 mm	1250 mm
Rotation	OFF	OFF

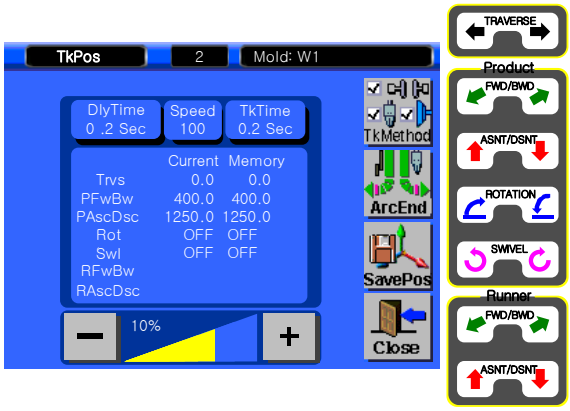

● STEP 18

[To set take our position for Traverse 0mm, Kick 100mm, Up/Down 1250mm, Rotation OFF]

Move robot arm with manual buttong until current position can be Traverse 0mm, Kick 100mm, Up/Down 1250mm, Rotation OFF

Press  to save.

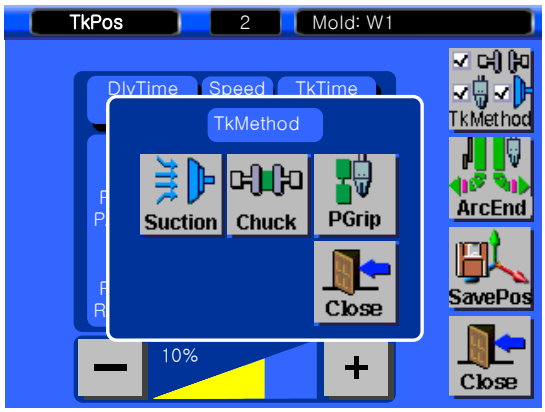

● STEP 19

[Take Out Method]

Press  to displays take out method, press  to operate suction,, press  to close. Press  to save.

Reference	Take out cycle time delay time is from take out position and receive ejector forward complete signal to chuck operation. Suction operation will be start after moving to take out position and chucking operation will be start after Take out cycle delay time complete

5.9 Ascent Position Setting (IMM Operate next cycle)

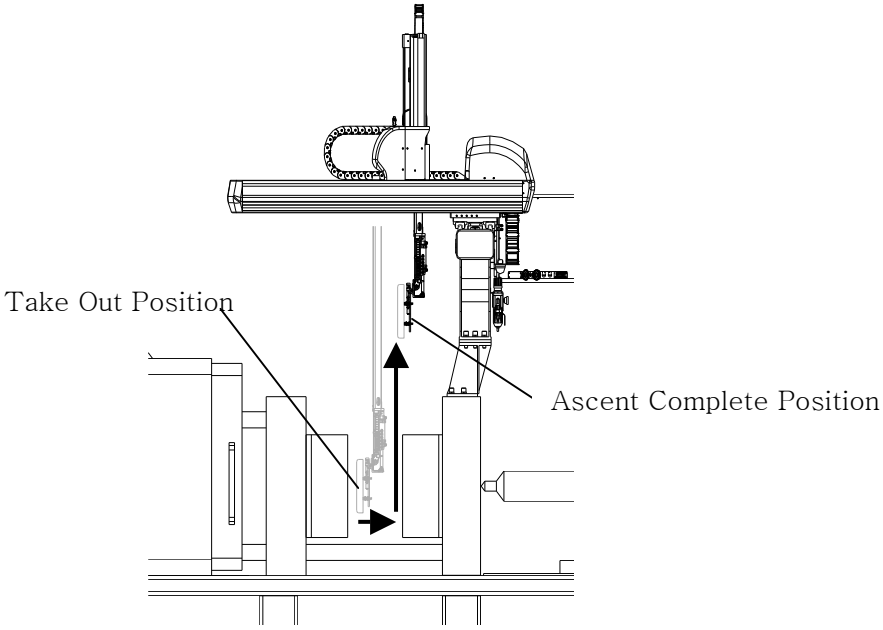

- **STEP 20**

Press  , display [no setting].

Press  to close.

- **STEP 21**

Cursor located on AscPos..

Press  to setting Ascend Position..

AscPos can be set up only in StepMod (Step Modification)

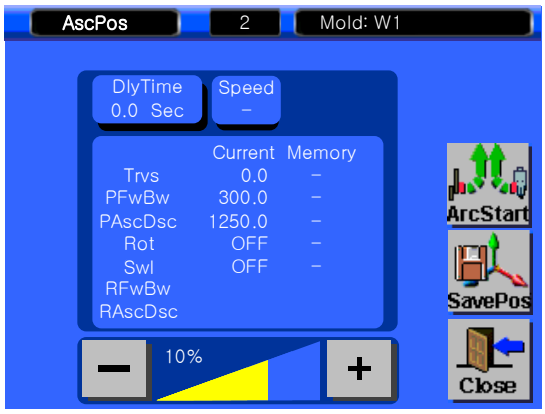

● STEP 22

[Delay time 0.3 Sec]

Press DlyTime 0.0 Sec to set delay time to up complete position.

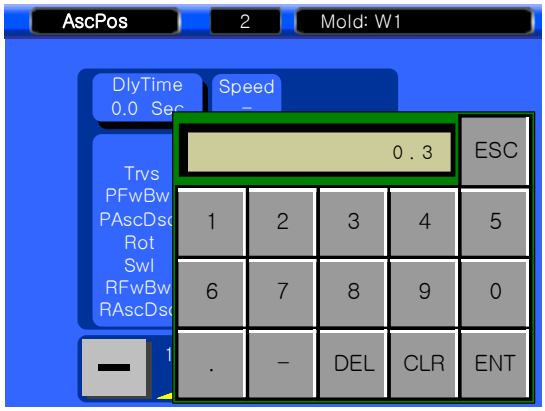

Press 0 . 3 and press ENT to save.

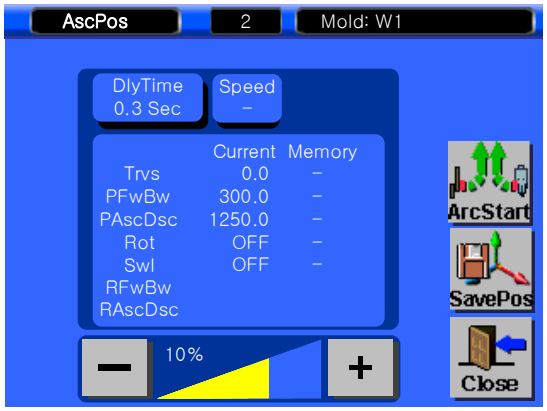

● STEP 23

[Speed setting 100%]

Speed setting to move up position, press Speed –.

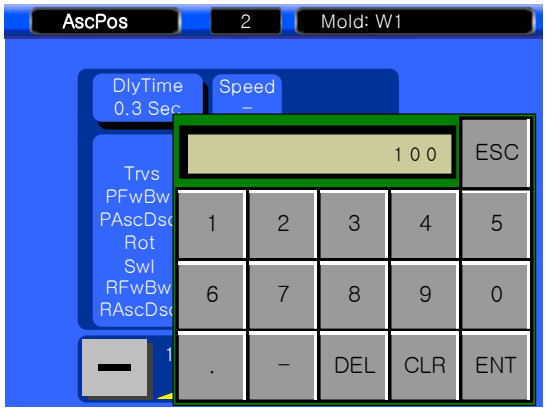

Press 1 0 0 and press ENT to save and close.

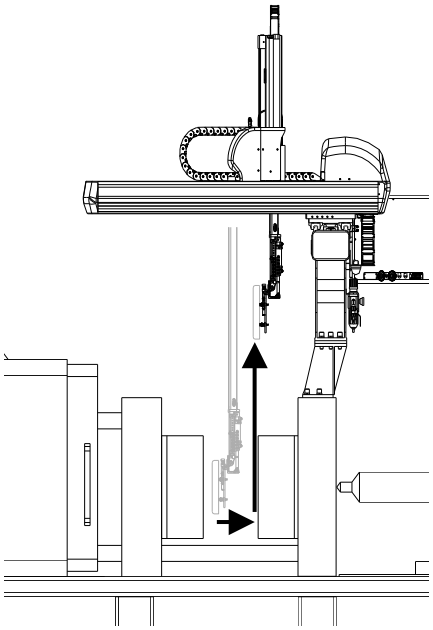

Position		
Each Axis	Take out	Ascent
Traverse	0 mm	0 mm
Kick	300 mm	200 mm
Up/Down	1250 mm	0 mm
Rotation	OFF	OFF

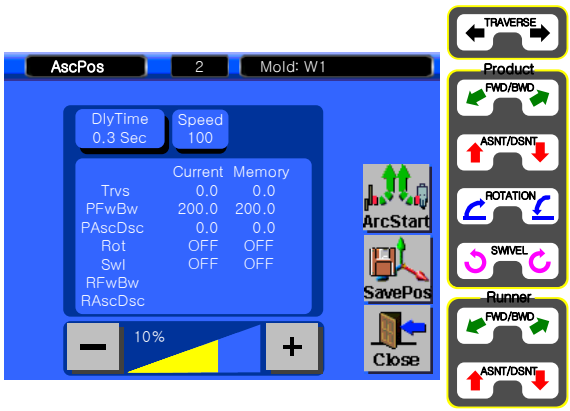

● STEP 24

[Set Ascent Complete position to Traverse 0mm, Kick 0mm, Up/Down 0mm, Rotation OFF]

Press manual button to Traverse 0mm, Kick 0mm, Up/Down 0mm, Rotation OFF.

Press 

to save position

Press 

to close.

5.10 Release Position

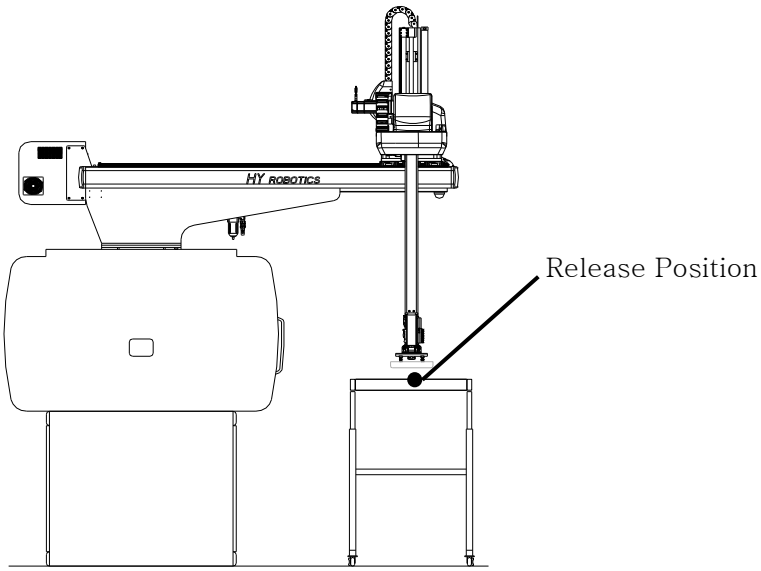

- **STEP 25**

Press  display No Step info.

Press  to close

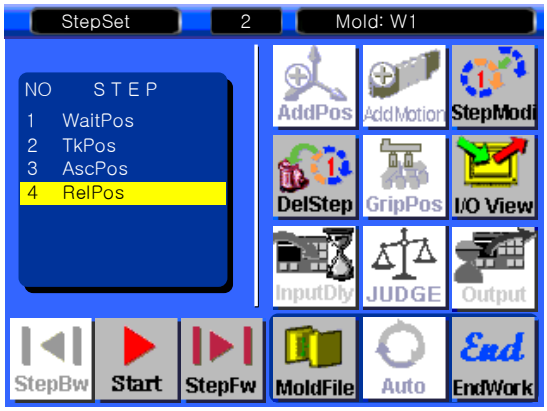

- **STEP 26**

Step cursor is located on RelPos (Release Position).

Press  to move to setting screen.

RelPoss can be set up only in StepMod (Step Modification)

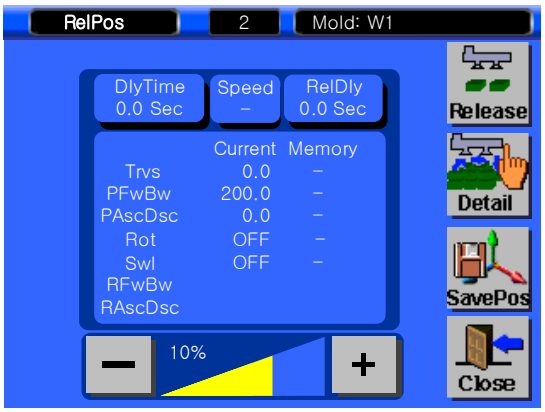

● STEP 27

[Delay Time 0.4 Sec]

To set delay time to move to release position, Press DlyTime 0 Sec.

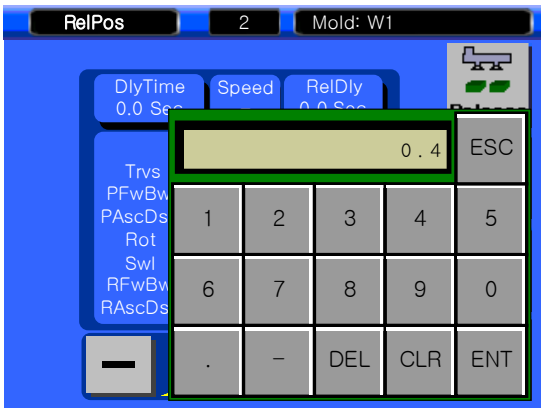

Press 0 . 4 and press ENT to save and close.

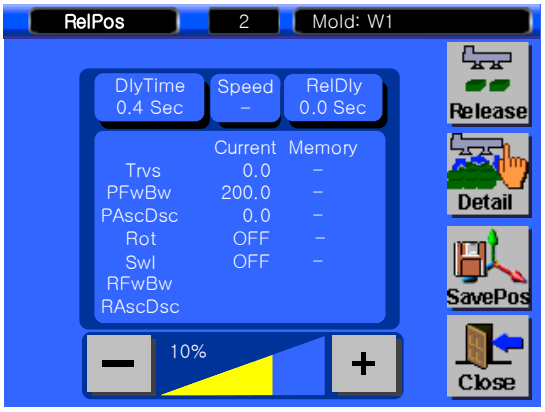

● STEP 28

[Speed setting with 80%]

Press Speed –

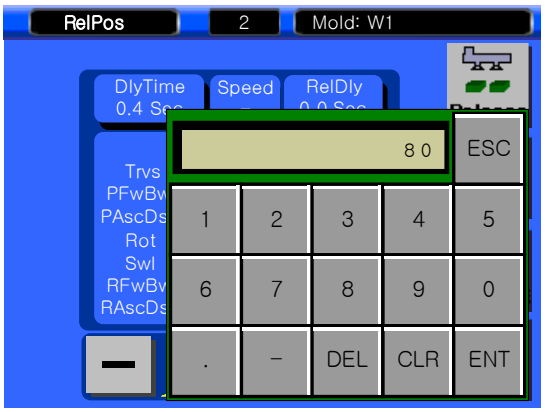

Press 8 0 and Press ENT to save.

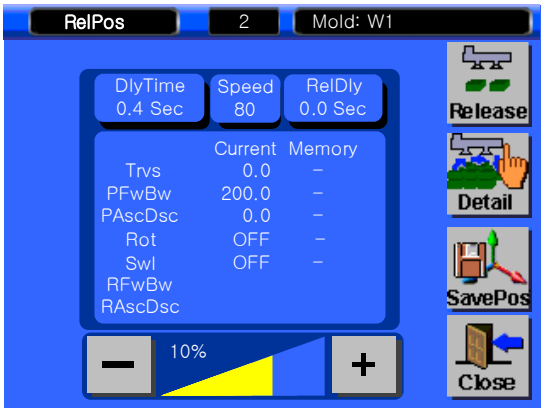

● STEP 29

[Release Delay 0.5 Sec]

To set Release Delay time , press RelDly 0.0 Sec

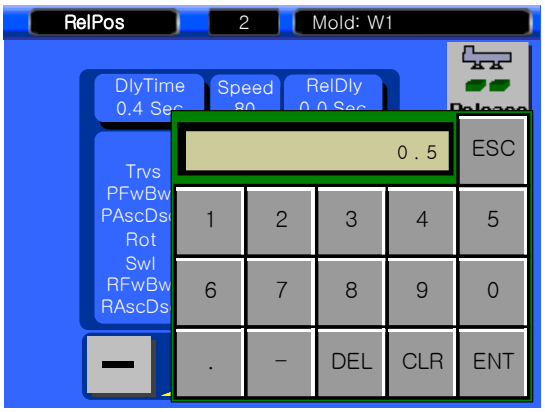

Press 0 . 5 and press ENT to save.

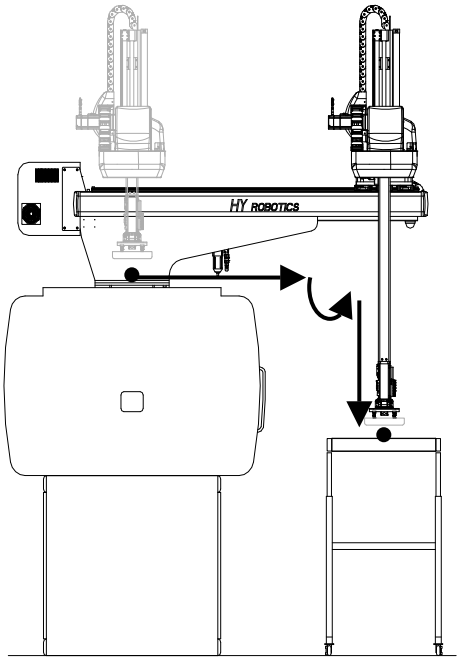

Position		
Each Axis	Ascent Position	Release position
Traverse	0 mm	1700 mm
Kick	200 mm	500 mm
Up/Down	0 mm	1100 mm
Rotation	OFF	ON

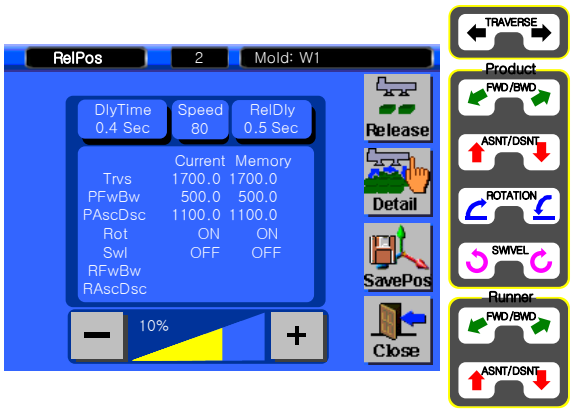

● STEP 30

[To set release position to Traverse 1700mm, Kick 30mm, Up/Down 1100mm, Chuck Rotation ON]

Press manual button to move robot arm to Traverse 1700mm, Kick 30mm, Chuck Rotation ON
And then move robot arm Down 1100mm

Press 

to save.

Press 

to release all position

Press 

.

WARNING	IN SAFETY ZONE, ROBOT ARM NEED TO UP COMPLETE TO MOVE TRAVERSE AXIS

5.11 Step Operation

- **STEP 31**

Press  to run robot go to next step.

After RelPos set up, press StepFw will finish one cycle and go back to first cycle.

- **STEP 32**

Run Step by Ste to confirm all position and setting is right.

Press  will run step with slow speed.

 will be changed to 

- **STEP 32**

During Step operation

Press  will stop operation

 will be changed to 

Press  to run in Fully Automatic Mode

 will not activate until finish the 1 step operation (after change mold, or reboot system)

5.12 Auto Runs

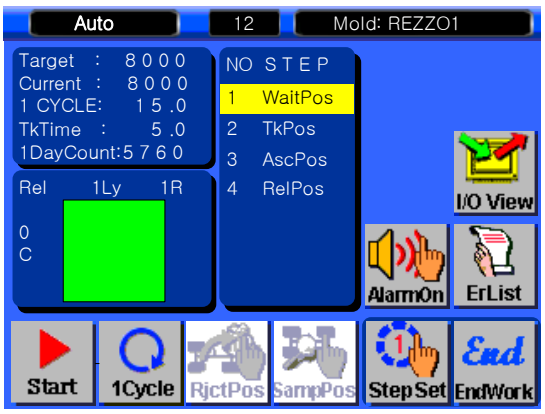

● **STEP 33**

To Set Target

Press 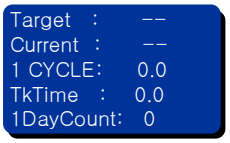

move to setting screen.

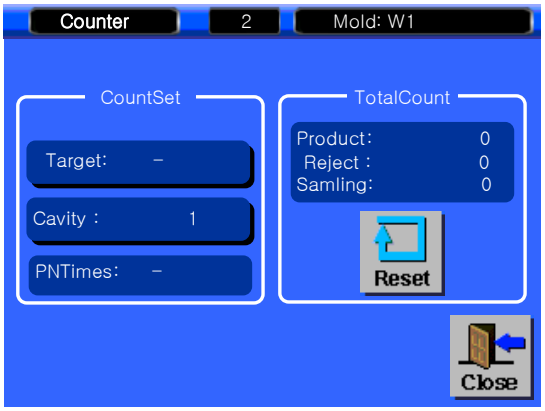

[Set 8000]

Press 

, input 8000.

Press 

move back to Auto

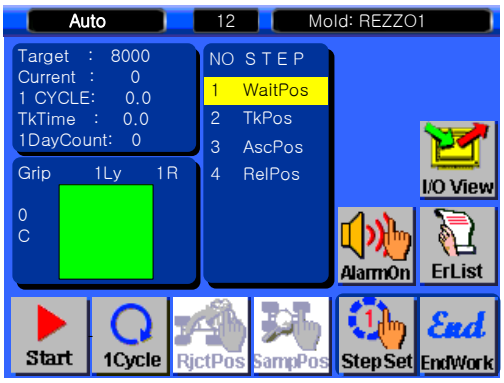

● **STEP 34**

Press 

, start Automatic Operation

will be changed to 

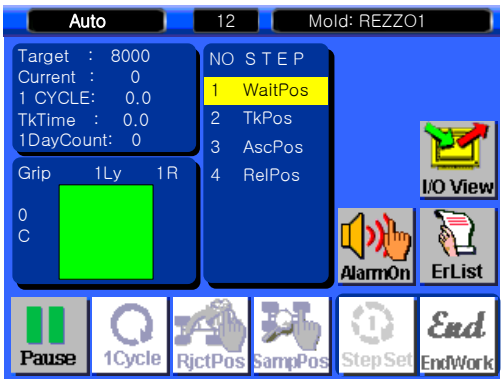

● **STEP 40**

Press 

, robot stops, 

will be changed to 

.

Press 

to finish Job, move to Mold Manger screen

6 Error

6.1Error Screen

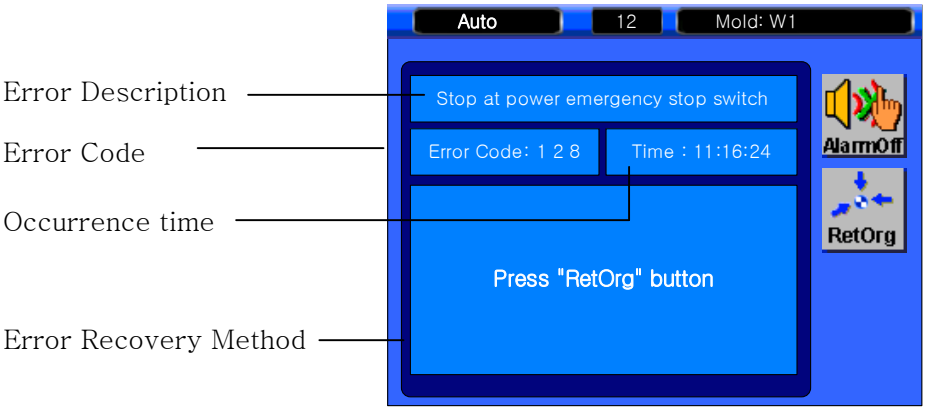

	Function
Error Code	Error Number
Error Description	Error Description
Occurrence time	The time when Error Occur
Error Recovery Method	Error Recovery Recommendation
	Turns off alarm sound.

6.2 Error List

6.2.1 Communication Related

NO	Description	Cause	Recovery Method
16	SC-CRC Communication Error	1. Noise 2. Hardward Failure 3. Program Failure	1. Reboot 2. Contact Factory
17	SC Communication Over Time		
18	Not available Command		

6.2.2 Motor Related

NO	Description	Cause	Recovery Method
96	Traverse Servo ON Fail	Communication Error of each servo Axis	1. Check Message and reboot system 2. Check Connector and cable of each axis
97	M-Arm Kick Servo ON Fail		
98	M-Arm Down Servo ON Fail		
112	Traverse Servo Drive Alarm	1. Motor Overload 2. Motor Overpower 3. Bad Encorder Connector 4. Motor Power 5. Crash	1. Confirm Servo Motor Drive Alarm Code. 2. If motor overload error occur, robot may hit barrier or operate mistake crash. Restart robot after completely shutdown robot for more than 20 seconds.
113	M-Arm Kick Servo Drive Alarm		
114	M-Arm Down Servo Drive Alarm		

NO	Description	Cause	Recovery Method
128	Emergency Steop	Stop by emergency switch	Remove cause of emergency stop and then cancel it by turning emergency stop button.
128 -1	IMM Emergency Stop	Stop by Injection Molding Machine emergency switch	Remove cause of emergency stop and then cancel it by turning Injection Molding Machine emergency stop button.
129	Emergency Stop	Stop by emergency switch	Remove cause of emergency stop and then cancel it by turning emergency stop button.
131	Regeneration Over Load	Descending to Insert Pick up position, Insert Pickup safety door opened	Check Signal and sensor
132	Aux. Interface Error	IMM is not using Robot.	Connect Robot and IMM Interface

6.2.2 Pneumatic Related

NO	Description	Cause	Recovery Method
152	Chuck Rotation Error	1. Air Pressure is Low 2. Sensor is not confirm position 3. Bad Sensor 4. Wire damaged	1. Check Air Regulator 2. Check I/O 3. Check Sensor Touch Plate 4. Fix and Move Origin Point..
153	Chuck Rotation Return Error		
154	Chuck Swivel Error		
155	Chuck Swivel Return Error		

6.2.3 Sol valve

NO	Description	Cause	Recovery Method
160	Suction Failure	1. Vacuum Failure 2. Check Suction Pad 3. Leaking at Stem and Fitting 4. Adjust Vacuum sensitivity	1. Open Safety Door and Fix Problem in Manual Mode 2. Replace Pad. 3. Tight Stem and Fitting Screw
161	Chuck Failure	1. Chuck Motion Failure 2. Chuck Sensor Touch Failure 3. Bad Sensor	1. Open Safety Door and Fix Problem in Manual Mode 2. Adjust location of Sensor 3. Replace Sensor
162	M-Arm Gripper Failure	1. Gripper Motion Failure 2. Wrong Sensor Location 3. Bad Sensor	

6.2.4 Machine Abnormality

NO	Description	Cause	Recovery Method
176	Control Initialize Failure	1. Noise 2. Program Failure	Reboot Contact Factory
177	No Ascent Complete Sensor	1.No Ascent Complete Signal 2. For Traverse motion, Ascent Complete signal required.	1. Check Ascent Complete Signal 2. Reboot System 3. Check Ascent Complete Sensor.
178	Traverse Origin Failure	1. Touch Plate Setting 2. Touch Plate Sensor Bad 3. Servo Motor Pulley loosened 4. Bad Belt	1. Reset Touch Plate 2. Change Touch Plate Sensor 3. Tighten motor Pulley 4. Belt change
179	No Detect Down Safety Sensor	1. Bad down Prohibit Sensor 2. Loosed Traverse Pulley 3. Damaged Traverse Belt	1. Change Down Prohibit Sensor 2. Tight Traverse Pulley 3. Change Traverse Belt
180	Balance Cylinder Error	Balance cylinder pneumatic pressure low	Set up Balance sensor pressure to Pneumatic pressure.

6.2.6 Operation Error

NO	Description	Cause	Recovery Method
208	Robot arm is not up	Traverse Movement without Up (Ascent) Complete	Ascent Main and Sub Arm
209	Over limit of motion area	When Robot can not move due to out of operation range	Move the robot arm to other direction
210	Servo Interpolation Error	Wrong J Motion Setting	Correct J Motion Setting Position
211	Multi-Release Position Error	Sub Release position is not right	Correct Sub Release position
214	Mold is not completely open	In Manual Mode, activate Robot Arm Down without Mold Open Complete	Check Mold completely opened. (Check Mold Open Complete Sensor)
223	Safety Door Stop	In Auto mode, when safety door opened, robot will stop operation	Close Safety Door.

6.2.7 Etc

NO	Description	Cause	Recovery Method
224	Speed Information Error	Wrong Speed Input	Contact Factory

225	No Servo Origin Setup	Origin looking without home sensor detection setting.	
226	Encoder Z Non Setup	Origin looking without Encorder Z Phase	
238	Dip Switch Fail	Dip switch Setting is wrong	
239	Watch Dog Timer Reset	Noise or Electricity	
-	Unknown error	-	

Appendix

A. Specification

Power	Control Method	Pneumatic Pressure
1 phase AC220V 50/60Hz	Micro computer	0.5 to 0.6 Mpa

MODEL	Applicable injection molding machine	Traverse stroke (mm)			Kick stroke (mm)		Descent stroke (mm)		Pneumatic consumption (Nl/cycle)	Max. headling Capacity	Electric consumption
		standard	L Type	LL Type	Main Arm	Sub Arm	Main Arm	Sub Arm			
NEXIA-V-100S	Up to 100 ton	1300	1500	1700	651	-	700	-	6	5	1 phase AC220V S:10A(Max.) D:13A(Max.)
NEXIA-V-100D					525	525		750			
NEXIA-V-200S	Up to 200 ton	1500	1700	1900	651	-	800	-	7		
NEXIA-V-200D					525	525		850			
NEXIA-V-300S	Up to 300 ton	1500	1700	1900	831	-	950	-	7		
NEXIA-V-300D					705	705		950			
NEXIA-V-400S	Up to 400 ton	1700	2000	-	1025	-	1100	-	16	10	
NEXIA-V-400D					850	850		1100			
NEXIA-V-600S	Up to 600 ton	2000	2500	-	1038	-	1300	-	22	15	1 phase AC220V S:11A(Max.) D:15A(Max.)
NEXIA-V-600D					890	890		1300			
NEXIA-V-800S	Up to 800 ton	2500	3000	-	1090	-	1600	-	35	20	1 phase AC220V S:12A(Max.) D:15A(Max.)
NEXIA-V-800D					970	970		1600			
NEXIA-V-1300S	Up to 1300 ton	3000	3500	-	1590	-	1800	-	56	30	3 phase AC220V S:16A(Max.)
NEXIA-V-2000S	Up to 2000 ton	3500	4000	-	1750	-	2100	-	152	40	3 phase AC220V S:26A(Max.)
NEXIA-V-2500S	Up to 3000 ton	4000	4500	-	1750	-	2500	-	152	40	
NEXIA-V-3000S					2100	-	3000	-	152	70	

B. External Dimension

B.1 NEXIA-V Series

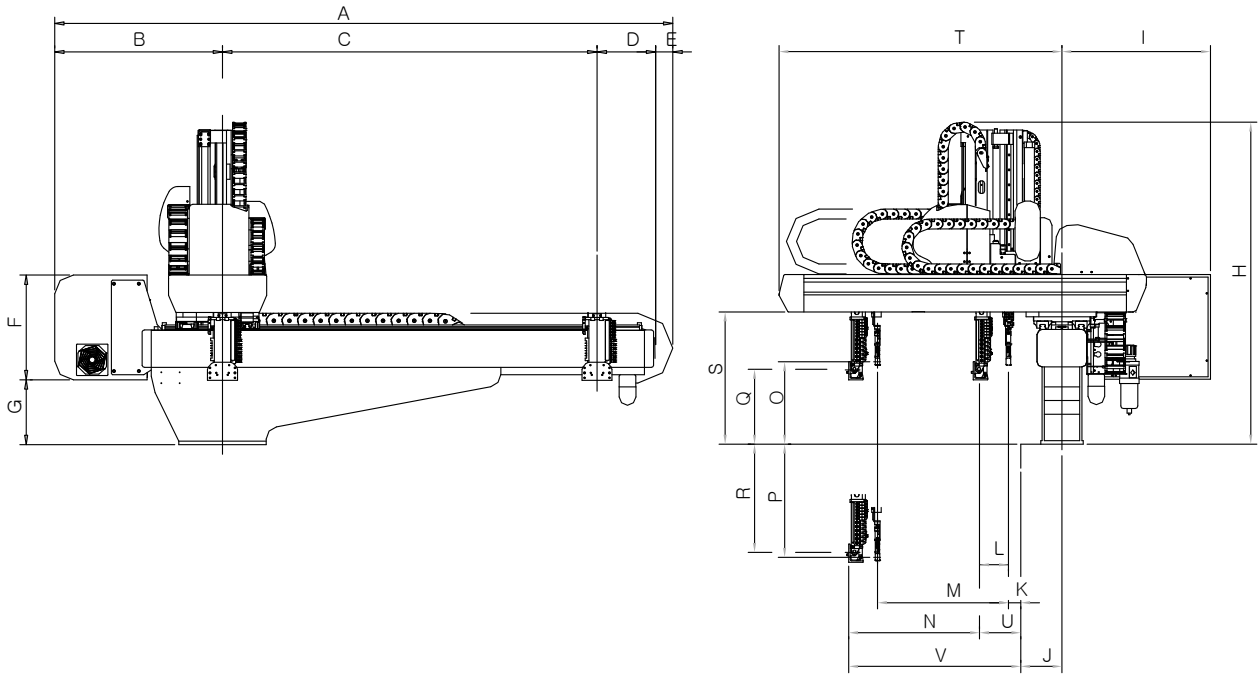

(Unit: mm)

Type	A	B	C	D	E	F	G	H	I	J	K	L	M	N	O	P	Q	R	S	T	U	V
NEXIA-V-100S	2207 (2407) [2607]	672	1300 (1500) [1700]	235	—	420	260	1232	596	165	—	—	—	651	—	—	300	400	530	1135	40	691
NEXIA-V-100D											50	116	525	525	330	420					166	
NEXIA-V-200S	2407 (2607) [2807]	672	1500 (1700) [1900]	235	—		260	1292	596	165	—	—	—	651	—	—	300	500	530	1135	40	691
NEXIA-V-200D											50	116	525	525	330	520					166	
NEXIA-V-300S	2407 (2607) [2807]	672	1500 (1700) [1900]	235	—		260	1367	596	165	—	—	—	831	—	—	300	650	530	1315	40	871
NEXIA-V-300D											50	116	705	705	330	620					166	
NEXIA-V-400S	2687 (2987)	592	1700 (2000)	395	—		179	1620	636	205	—	—	—	1025	—	—	254	846	632	1567	70	1095
NEXIA-V-400D											73	172	850	850	340	760					245	
NEXIA-V-600S	3082 (3582)	632	2000 (2500)	450	—		284	1930	655	223	—	—	—	1038	—	—	310	990	752	1703	145	1183
NEXIA-V-600D											71	222	890	890	346	954					293	
NEXIA-V-800S	3812 (4312)	792	2500 (3000)	520	—		455	2320	680	255	—	—	—	1090	—	—	390	1210	927	1874	150	1290
NEXIA-V-800D											49	273	970	970	420	1180					322	
NEXIA-V-1300S	4463 (4963)	820	3000 (3500)	520	123	—	—	2640	726	270	—	—	—	1590	—	—	375	1425	1092	2410	267	1857
NEXIA-V-2000S	5510 (6010)	1055	3500 (4000)	806	149	—	—	3070	866	320	—	—	—	1750	—	—	420	1680	1197	2980	500	2250
NEXIA-V-2500S	6010 (6510)		4000 (4500)	786	166	—	—	3250			—	—	—		—	—		2080				
NEXIA-V-3000S	5960 (6460)	1100		860	—	—	—	3875	890	340	—	—	—	2100	—	—	485	2515	1397	3355	492	2592

( ): L Type [ ]: LL Type

B.2 NEXIA Series

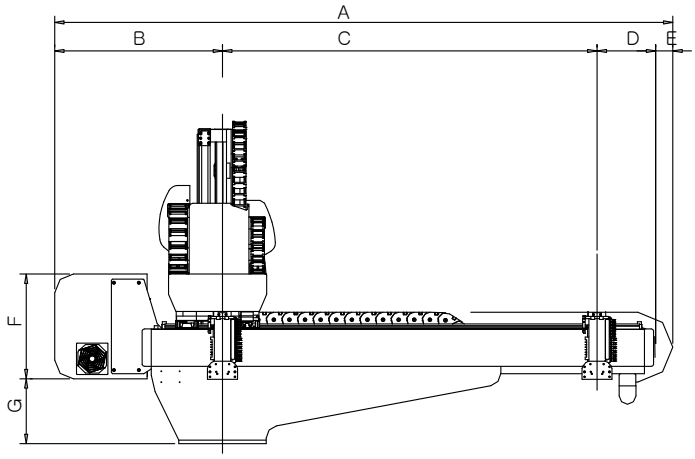

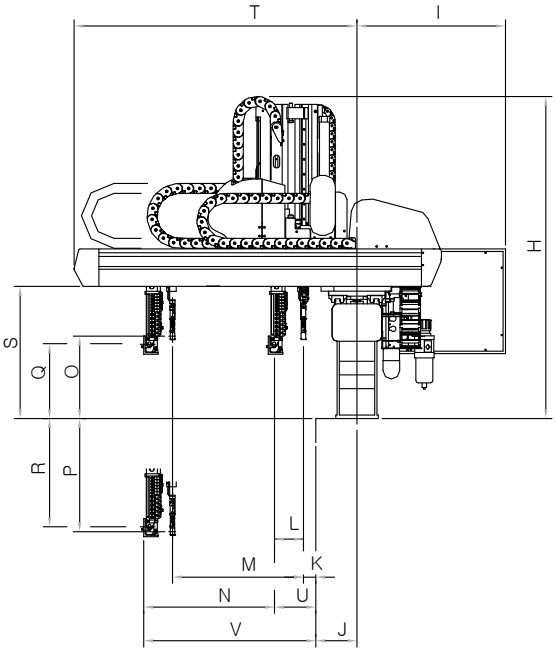

(Unit: mm)

Type	A	B	C	D	E	F	G	H	I	J	K	L	M	N	O	P	Q	R	S	T	U	V
NEXIA-400S	2587	672	1700	215	—	420	260	1472	596	165	—	—	—	951	—	—	300	800	530	1435	40	991
NEXIA-400D	(3087)		(2000)								50	116	825	825	330	770					166	
NEXIA-600S	3007	592	2000	415	—		179	1740	636	205	—	—	—	1085	—	—	254	1046	632	1627	70	1155
NEXIA-600D	(3507)		(2500)								73	172	910	910	340	960					245	
NEXIA-800S	3562	632	2500	430	—		284	2110	655	223	—	—	—	1218	—	—	310	1290	752	1883	145	1363
NEXIA-800D	(4062)		(3000)								71	222	1070	1070	346	1254					293	
NEXIA-1300S	4292	792	3000	500	—		455	2440	680	255	—	—	—	1572	—	—	390	1410	927	2320	200	1772
NEXIA-1300D	(4792)		(3500)								49	273	1450	1450	420	1380						
NEXIA-2000S	4988 (5488)	820	3500 (4000)	545	123	—	—	2820	726	270	—	—	—	1710	—	—	375	1725	1092	2530	267	1977
NEXIA-3000S	5990 (6490)	1055	4000 (4500)	786	149	—	—	3490	866	320	—	—	—	2070	—	—	420	2580	1197	3300	500	2570

( ): L TYPE

C. Safe guarded space

C.1 NEXIA-V Series

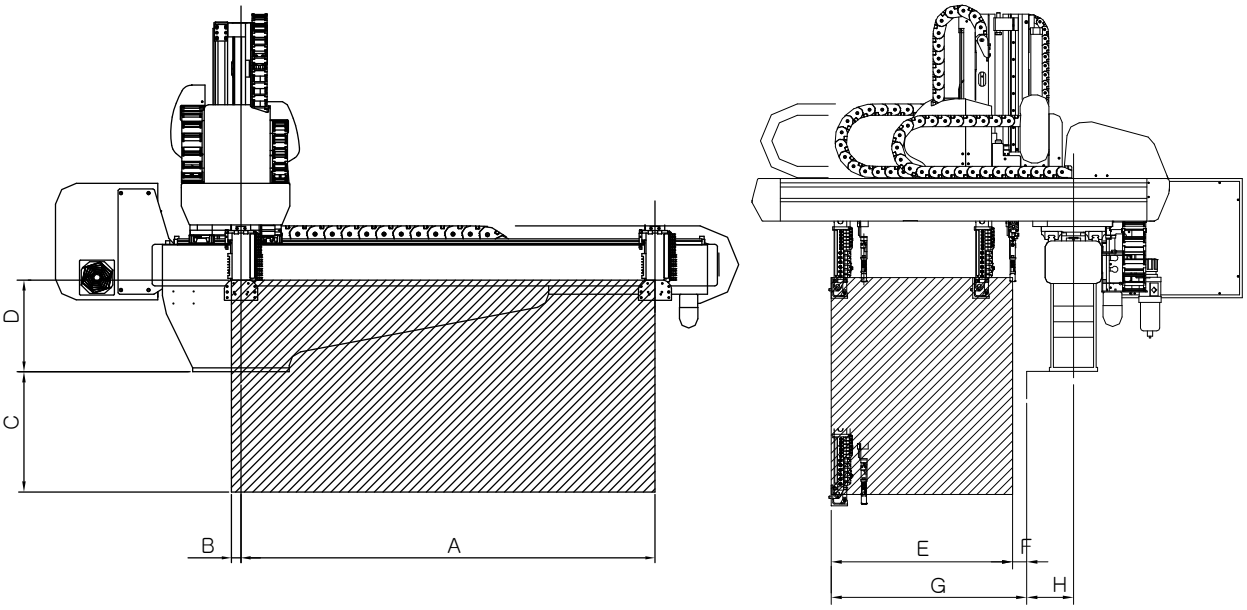

(Unit: mm)

Type	A	B	C	D	E	F	G	H
NEXIA-V-100S	1300 (1500) [1700]	30	400	300	651	—	691	165
NEXIA-V-100D				330	641	50		
NEXIA-V-200S	1500 (1700) [1900]		500	300	651	—	691	165
NEXIA-V-200D				330	641	50		
NEXIA-V-300S	1500 (1700) [1900]		650	300	831	—	871	165
NEXIA-V-300D				330	821	50		
NEXIA-V-400S	1700 (2000)	50	846	254	1025	—	1095	205
NEXIA-V-400D				340	1022	73		
NEXIA-V-600S	2000 (2500)		990	310	1038	—	1183	223
NEXIA-V-600D				346	1112	71		
NEXIA-V-800S	2500 (3000)		1210	390	1212	—	1412	255
NEXIA-V-800D				420	1363	49		
NEXIA-V-1300S	3000 (3500)		1425	375	1590	—	1857	270
NEXIA-V-2000S	3500 (4000)		1680	420	1750	—	2250	320
NEXIA-V-2500S	4000 (4500)		2080	420		—		
NEXIA-V-3000S			2515	485	2100	—	2592	340

( ): L TYPE, [ ]: LL TYPE

C.2 NEXIA Series

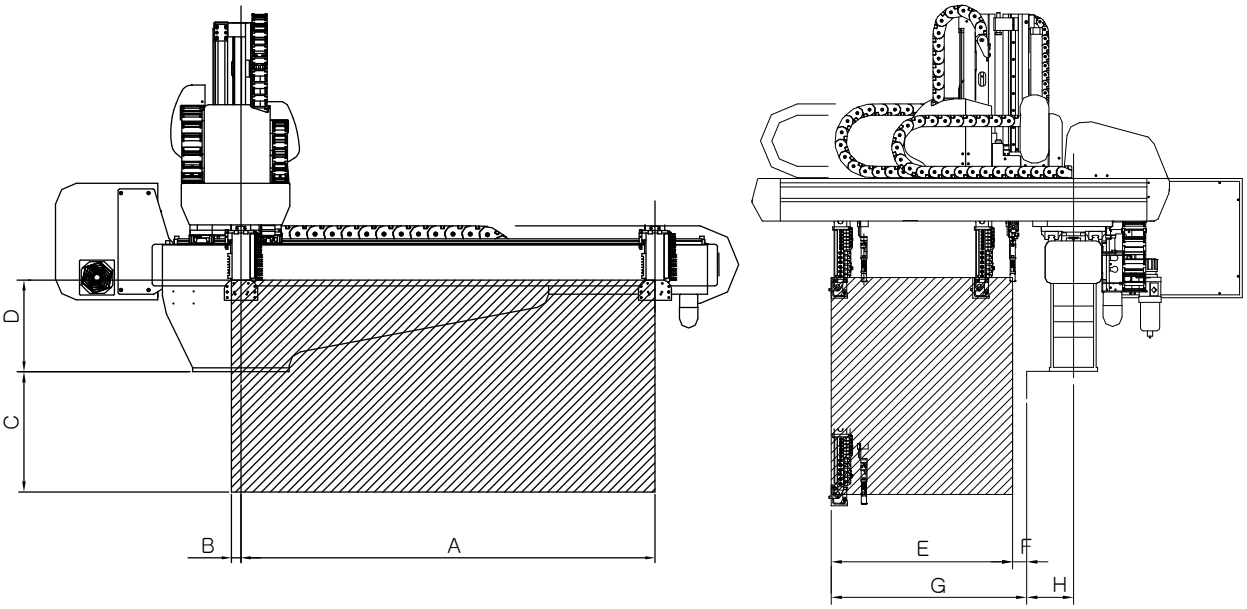

(Unit: mm)

형 식	A	B	C	D	E	F	G	H
NEXIA-400S	1700 (2000)	50	800	300	951	—	991	165
NEXIA-400D				330	941	50		
NEXIA-600S	2000 (2500)		1046	254	1085	—	1155	205
NEXIA-600D				340	1082	73		
NEXIA-800S	2500 (3000)		1290	310	1218	—	1363	223
NEXIA-800D				346	1292	71		
NEXIA-1300S	3000 (3500)		1410	390	1572	—	1772	255
NEXIA-1300D				420	1723	49		
NEXIA-2000S	3500 (4000)		1725	375	1710	—	1977	270
NEXIA-3000S	4000 (4500)		2580	420	2070	—	2570	320

D. Air Chart

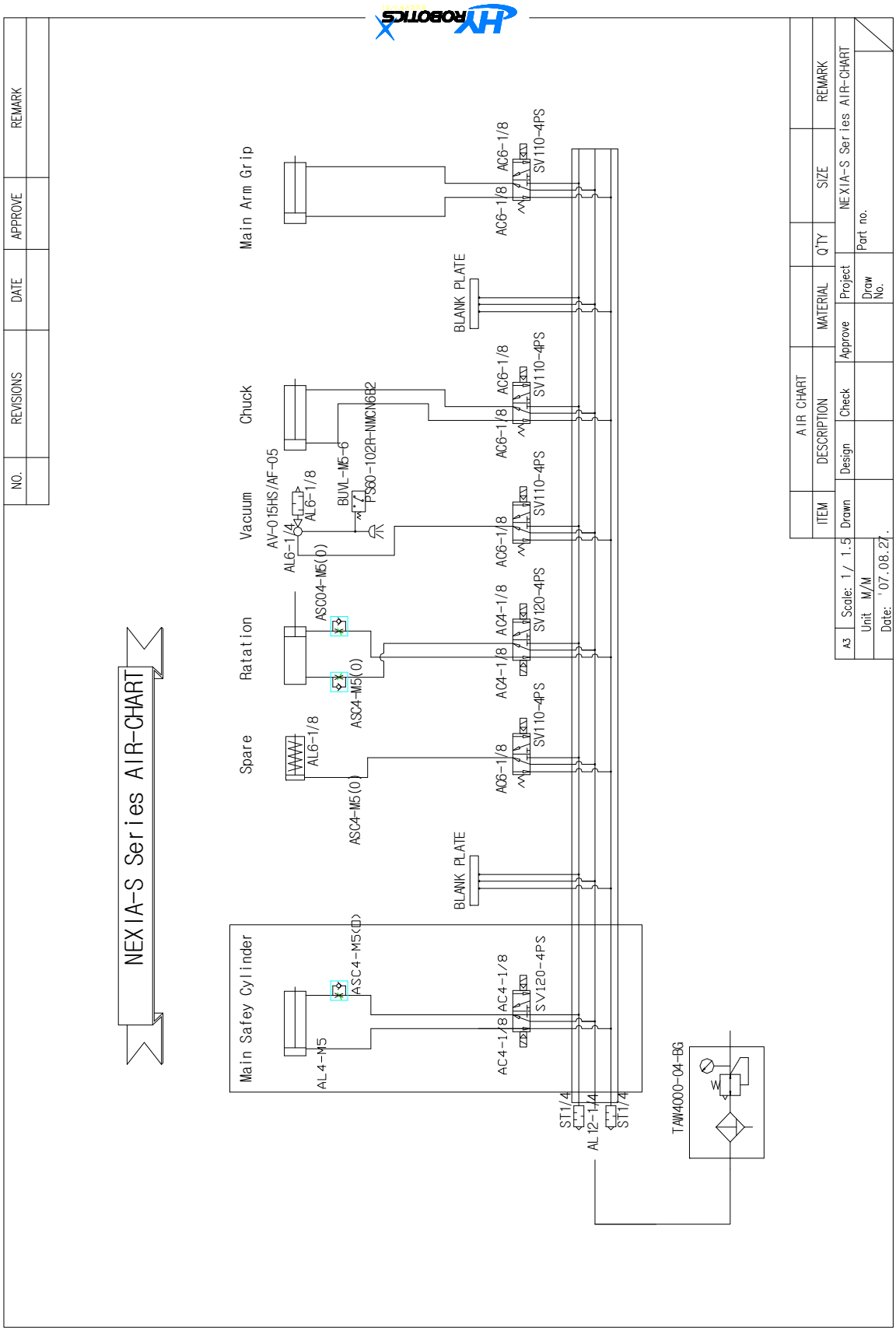
NEXIA-S Series AIR-CHART
Main Arm Grip
Chuck
Vacuum
Ratation
Spare
Main Safey Cylinder
AC6-1/8
SV110-4PS
BLANK PLATE
AV-015HS/AF-05
AL6-1/4
AL6-1/8
BUVL-M5-6
PS60-102R-NMCN6B2
ASC04-M5(O)
ASC4-M5(O)
AC4-1/8
SV120-4PS
AL4-M5
ST1/4
AL 12-1/4
TAW4000-04-BG
NO.
REVISIONS
DATE
APPROVE
REMARK
ITEM
DESCRIPTION
MATERIAL
Q'TY
SIZE
Drawn
Design
Check
Approve
Project
Draw No.
Part no.
A3
Scale: 1 / 1.5
Unit M/M
Date: '07.08.27.

E. Interlock

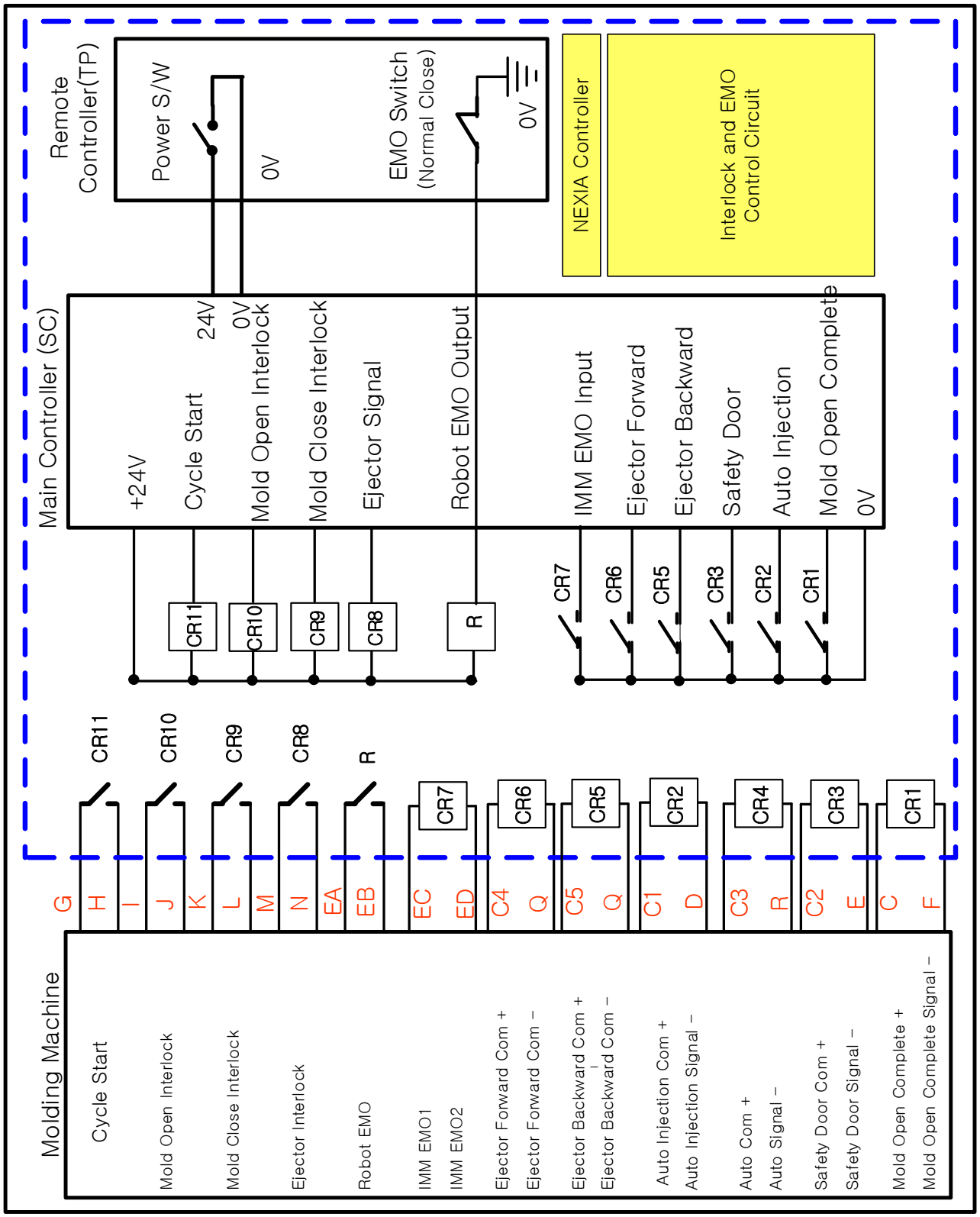
Remote Controller(TP)
Power S/W
0V
EMO Switch (Normal Close)
0V
NEXIA Controller
Interlock and EMO Control Circuit
Main Controller (SC)
+24V
Cycle Start
24V
0V
Mold Open Interlock
Mold Close Interlock
Ejector Signal
Robot EMO Output
IMM EMO Input
Ejector Forward
Ejector Backward
Safety Door
Auto Injection
Mold Open Complete
0V
CR11
CR10
CR9
CR8
R
CR7
CR6
CR5
CR3
CR2
CR1
CR11
CR10
CR9
CR8
R
CR7
CR6
CR5
CR2
CR4
CR3
CR1
G
H
I
J
K
L
M
N
EA
EB
EC
ED
C4
Q
C5
Q
C1
D
C3
R
C2
E
C
F
Molding Machine
Cycle Start
Mold Open Interlock
Mold Close Interlock
Ejector Interlock
Robot EMO
IMM EMO1
IMM EMO2
Ejector Forward Com +
Ejector Forward Com –
Ejector Backward Com +
Ejector Backward Com –
Auto Injection Com +
Auto Injection Signal –
Auto Com +
Auto Signal –
Safety Door Com +
Safety Door Signal –
Mold Open Complete +
Mold Open Complete Signal –

Signal	Board Connenctor	Color	MS-Connector	Wire Numbering	Name
Y305	16-8	Black+blue	A	EA	Robot Emergency In
Y304	16-7	Blue	B	M	Ejector Siganl In
Y303	16-6	Green	C	K	Mold Close In
Y302	16-5	Brown	D	I	Mold Open In
Y301	16-4	Black	E	G	Take Out Complete In
GND	16-3	Purple	F	0V	GND
	14-7	Violet+white	G	EB	Robot Emergency Out
Y300	14-5	Orange+black	H	CY	Conveyer IN
	14-6	Red+black	J	CV	Conveyer Out
Internal	14-8	Sky+black	K	RU	Robot Use
GND	14-3	Sky	L	EC	IMM Emergency Out
	16-15	Blue+white	M	N	Ejector Siganl Out
	16-14	Green+white	N	L	Mold Colse out
	16-13	Brown+white	P	J	Mold Open out
	16-12	Black+white	R	H	Take Out Complete out
P24V	16-11	Red	S	24V	24V
X300	14-14	Orange	T	D	Auto Injection -Coil (-)
X301	14-13	Gray	U	F	Mold Open Complete -Coil (-)
X302	14-12	Yellow	V	E	Safety Door Open -Coil (-)
X303	14-11	Black+red	W	R	Full Automatic -Coil (-)
X304	14-10	Yellow+black	X	S	Ejector Backward Complete -Coil (-)
X305	14-9	Pink	Y	Q	Ejector Forward Complete -Coil (-)
Internal	14-1	Pink+black	Z	ED	IMM Emergency In
	16-1	White+yellow	a	C1	Auto Injection -Coil (+)
	16-2	White	b	C	Mold Open -Coil (+)
	16-9	White+red	d	C2	Safety Door Open -Coil (+)
	14-2	White+black	e	C3	Full Automatic -Coil (+)
	16-10	Black+yellow	f	C5	Ejector Backward Complete -Coil (+)
	14-4	White+gray	g	C4	Ejector Forkward Complete -Coil (+)

F. Input/Output

Input			Output		
X000	VacuumOk	Vacuum Confirm	Y000	Vacuum	Vacuum & Multi Release1
X002	ChuckOk	Chuck Confirm	Y002	Chuck	Chuck
X004	SArmGripOk	Sub Arm Grip Confirm	Y004	Nipper	Nipper (Internal. External)
X005	MAGripOk	Main Arm Grip Confirm	Y005	MArmGrip	Main Arm Grip
X006	BalanceS	Balance Sensor	Y006	SArmGrip	Sub Arm Grip
X007	SSftCylBw	Sub Arm Safety Cylinder Backward	Y007	UserOut5	User Out 5
X008	UserIn5	User Input 5	Y008	UserOut6	User Out 6
X009	UserIn6	User Input 6	Y009	UserOut7	User Out 7
X010	UserIn7	User Input 7	Y010	UserOut8	User Out 8
X011	UserIn8	User Input 8	Y011	SArmDown	Sub Arm Up/Down
X012	SADownOk	Sub Arm Down Confirm	Y012	SArmKick	Sub Arm Kick
X013	SArmKickOk	Sub Arm Kick Confirm	Y013	EOATRotate	EOAT Rotation
X014	RotateOk	Rotation Complete	Y014	RotateReturn	EOAT Rotation Return
X015	SwivelOk	Swivel Complete	Y015	EOATSwivel	EOAT Swivel
X016	TrvRtOk	Traverse Return Complete	Y016	SwivelReturn	EOAT Swivel Return
X017	SafetyDown	Safety Down	Y017	SSftCylBw	Sub Safety Cylinder Backward
X018	MarmKickOrg	Main Arm Kick Origin	Y018	SSftCylFw	Sub Safety Cylinder Forward
X019	MarmUpOrg	Main Arm Up Origin	Y021	MulOff2	Multi Release(Off)2
X020	SAKickRtOk	Sub Arm Kick Confirm	Y022	MulOff3	Multi Release(Off)3
X021	SArmUpOk	Sub Arm Up Confirm	Y023	MulOff4	Multi Release(Off)4
X022	RotRetOk	Rotation Return Complete	Y024	SpareOut1	Spare Out 1
X023	SvlReOk	Swivel Return Complete	Y025	SpareOut2	Spare Out 2
X024	Obstacle	Obstacle Detection	Y028	SpareOut3	Spare Out 3
X100	RdyStack	Ready to Stacking	Y029	SpareOut4	Spare Out 4
X101	RdyInsert	Ready to Insert	Y100	StockOk	Cutting Start
X102	Reject	Part Reject	Y101	InsertGripOk	Insert Grip Ok
X104	UserIn1	User Input1	Y102	Full Auto	Full Auto
X105	UserIn2	User Input2	Y104	UserOut1	User Output 1
X106	UserIn3	User Input3	Y105	UserOut2	User Output 2
X107	UserIn4	User Input4	Y106	UserOut3	User Output 3
X200	JudgeSensor1	Judgment Sensor1	Y107	UserOut4	User Output 4
X201	JudgeSensor2	Judgment Sensor2	Y200	JudgeLamp1	Judegment Lamp 1
			Y201	JudgeLamp2	Judgement Lamp 2

Interlock Input			Interlock Output		
No	Display	Description	No	Display	Description
X300	AutoInject	Auto Injection	Y300	ConveyOn	Conveyor On
X301	MoldOpen	Mold Open Complete	Y301	TakeoutOk	Take Out Complete
X302	SafeDoor	Safety Door Open	Y302	MoldOpen	Mold Open
X303	FullAuto	Full Automatic	Y303	MoldClose	Mold Close
X304	EjtBwdOk	Ejector backward Complete	Y304	EjectorSig	Ejector Signal
X305	EjtFwdOk	Ejector Forward Complete	Y305	Robot Emg	Robot Emergency
X306	ImmEmg	IMM Emergency			

G MAIN WIRING

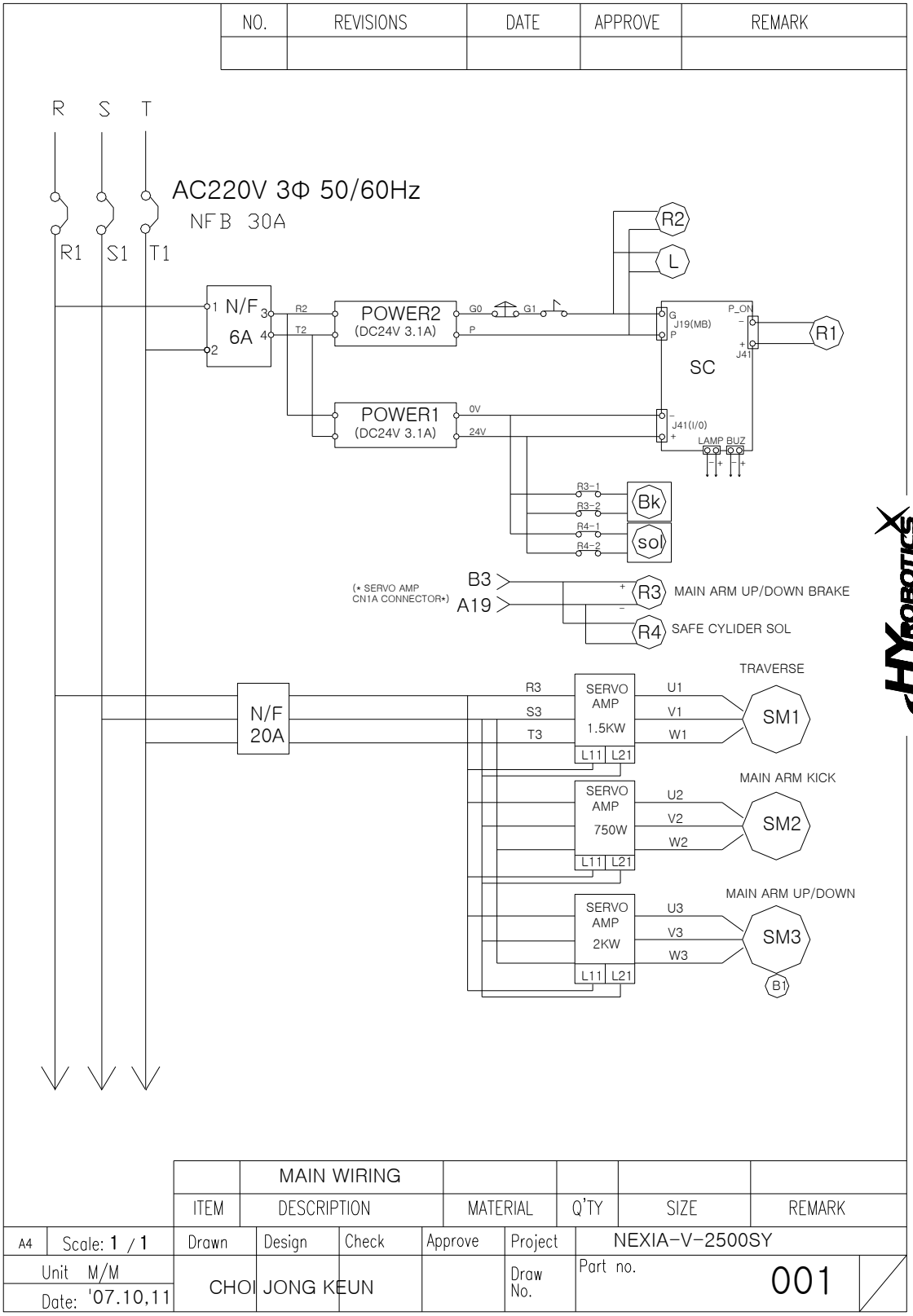

H. SYSTEM CONTROL (SC) BOARD

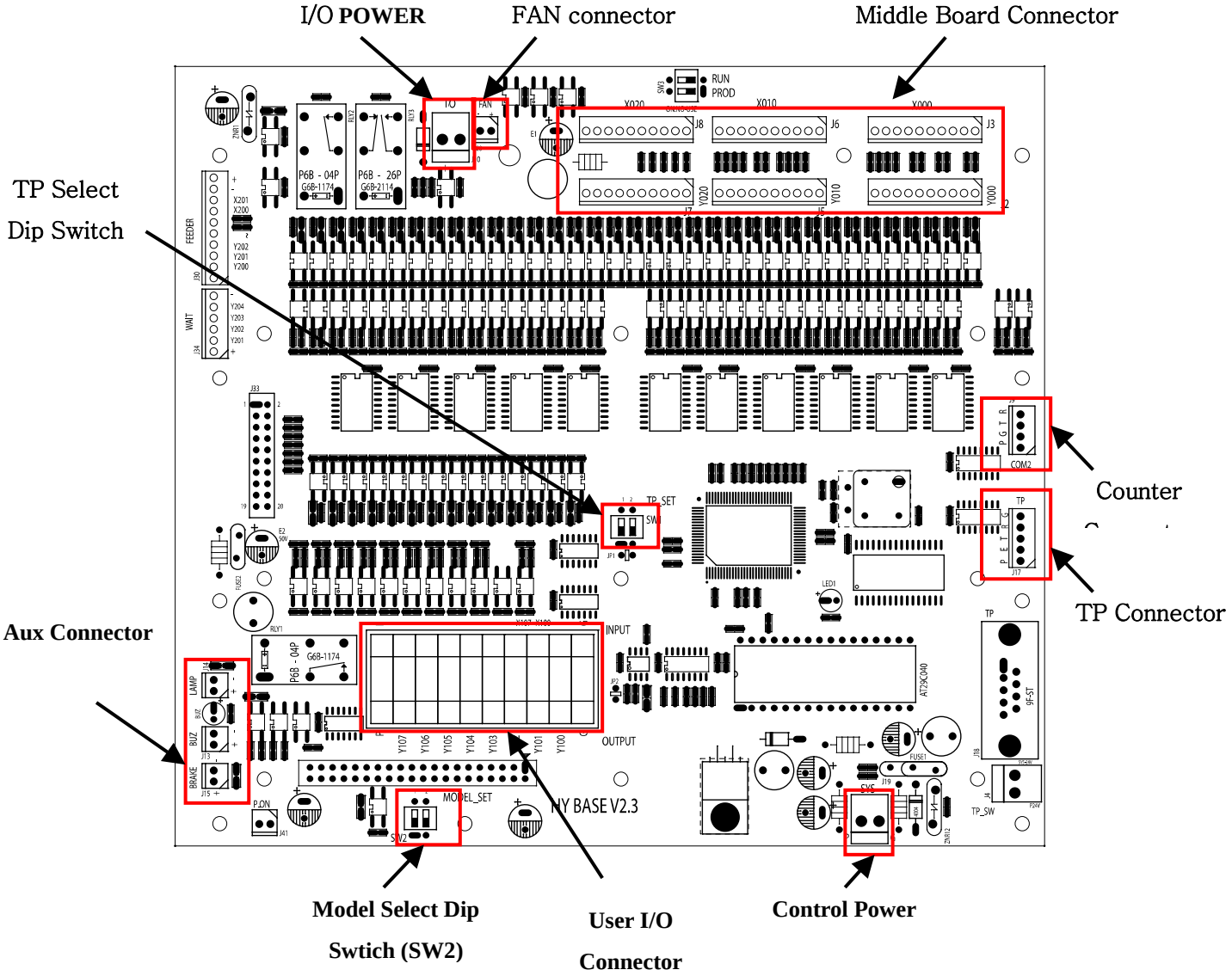

H.1 Model Selection Dip Switch (SW2)

Select as the number of MBD

- If MBD q'ty is 1, No1 Dipswitch is OFF, No 2 is ON
- If MBD q'ty is 2, All Dipswitch is off

Model Name	No 1MBD	No 2 MBD	Setting of DIP SW2
NEXIA-3X	MBD-4X	Not in Use	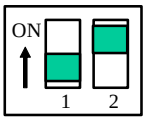
NEXIA-5X	MBD-4X	MBD-4X	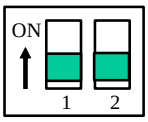

H.2 Dip switch for selection of TP(Touch Panel)

In 2 Pin Dip Switch . No1 is on and No 2 is off

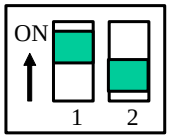

H.3 TP Connector (Touch Panel Connecter)

- Connector No.

Pin No	Name	Direction
P	P24V	OUT
E	EMERGENCY	IN
T	TX	OUT
R	RX	IN
G	GND	OUT

H.4 Separate Electric Connection

Separated 24V Control Power and I/O power

Pin No	Control Power	I/O Power	Power
	Connector J19	Connetor J10	
1	G	-	GND
2	P	+	24V

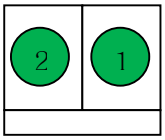

H.5 Middle Board Connector

Middle Board Connector J2, J3, J5, J6, J7, J8

- Connection middle board to X000, Y000, X010, Y010, X020, Y020 1 :1 connection

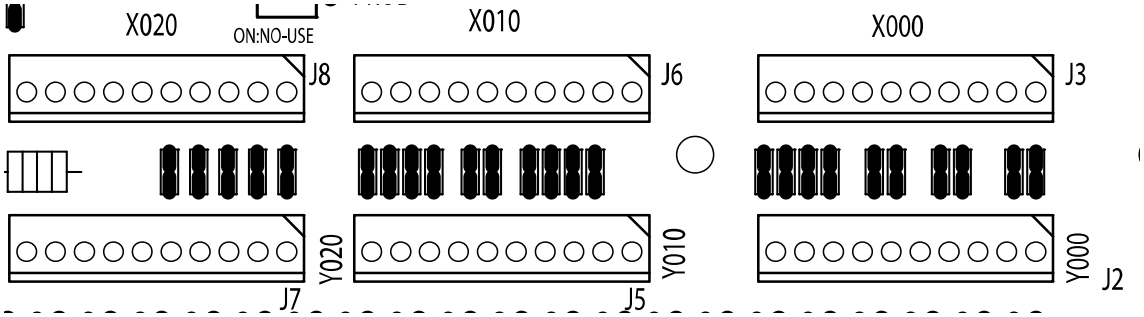

- Connector Number

Pin No.	J3	J6	J8	J2	J5	J7
01	X000	X010	X020	Y000	Y010	Y020
02	X001	X011	X021	Y001	Y011	Y021
03	X002	X012	X022	Y002	Y012	Y022
04	X003	X013	X023	Y003	Y013	Y023
05	X004	X014	X024	Y004	Y014	Y024
06	X005	X015	미사용	Y005	Y015	Y025
07	X006	X016	GND	Y006	Y016	Y026
08	X007	X017	GND	Y007	Y017	Y027
09	X008	X018	P24V	Y008	Y018	Y028
10	X009	X019	P24V	Y009	Y019	Y029

- Connector Pin No.

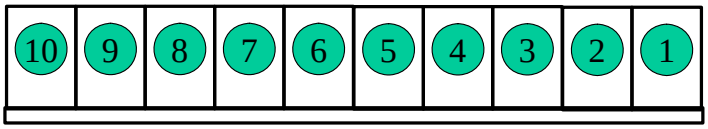

H.6 Aux. Connection and Fan Connector

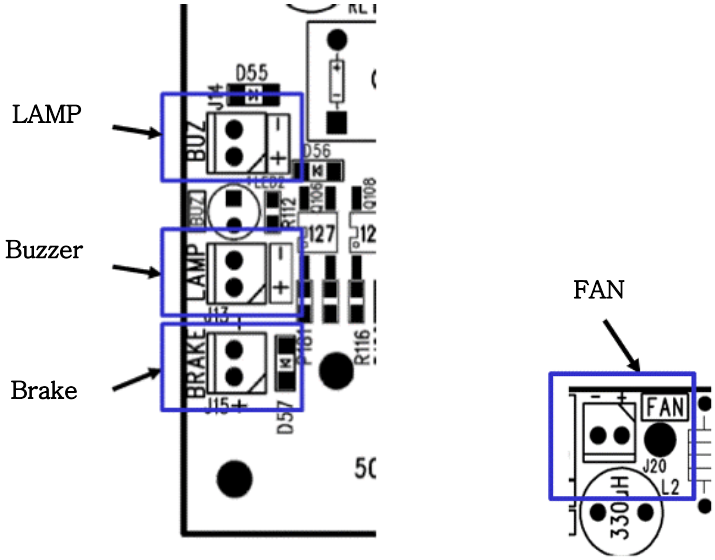

Brake (J15, Molex 2P)

- Signal of Connector and Pin

PinNo.	BRAKE Signal
	Connector J15
1	+24V
2	BRAKE

- Connector Pin Number

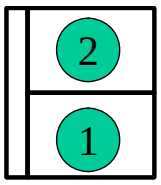

- Relay required for BRAKE Control

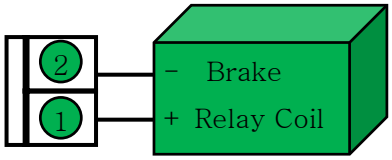

LAMP(Alarm Light) Installation (J14, Molex 2P)

- Signal of Pin and Connection

Pin No.	LAMP Signal
	Connector J14
1	+24V
2	LAMP

- Connector Pin No.

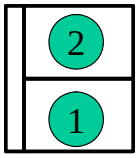

- Direct Connection with Alarm Light

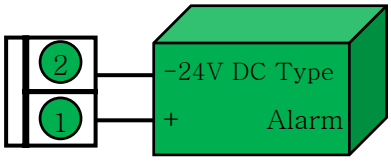

BUZZER Installation (J13, Molex 2P)

Pin N	BUZZER Signal
	Connector J13
1	+24V
2	BUZZER

- Connector Pin No.

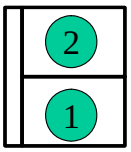

- Direct connection BUZZER (DC 24V)

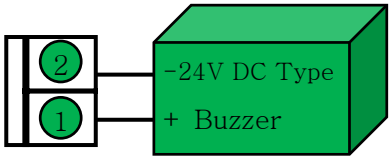

FAN Installation (J20, Molex 2P)

- When TP (Touch Panel) is on , Fan is always ON.

- Connector No and Pin No

Pin No	FAN Name
	Connector J20
41	+24V
2	FAN

- Connector Pin No.

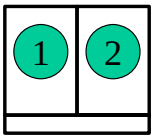

- If FAN is for DC Voltage, connect directly , if FAN IS FOR AC Voltage connect through external relay.

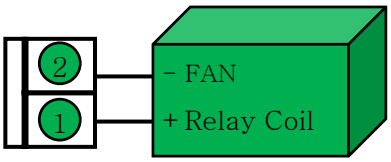

I. Motor Control Board : MBD-4X

I.1 Connector Layout

(1) Motor Connection (3M-20P) Connector)

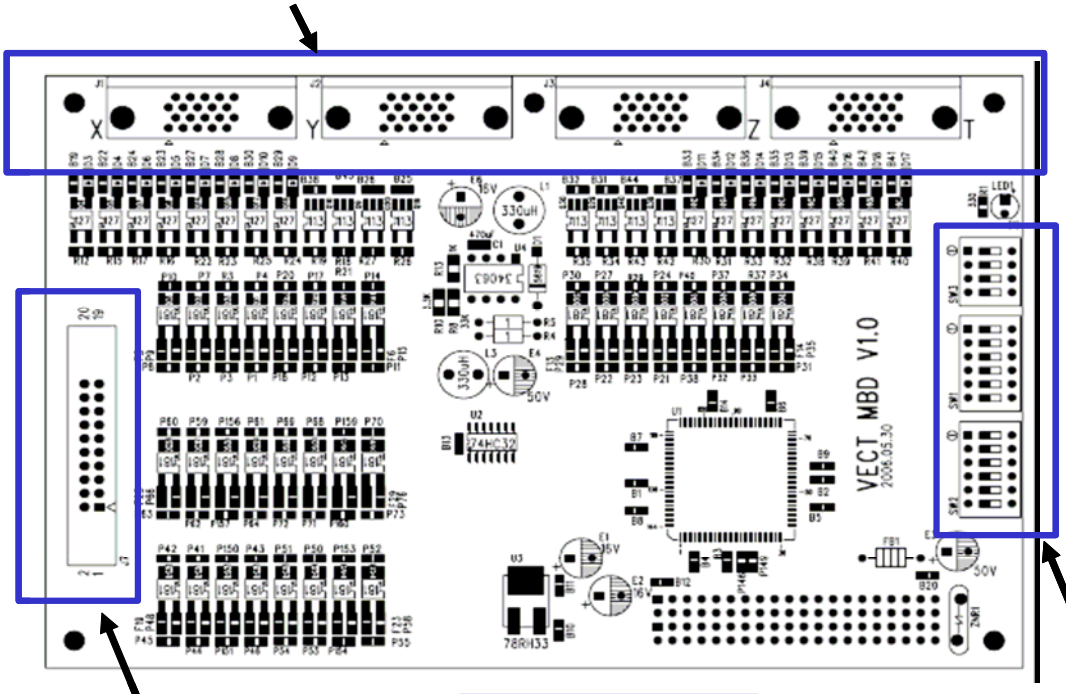

4 Axis MBD

(2) Board Setting Dip Switch

(3) Expansion of connector

I.2 Motor Driver Interface

- MBD Robot Axis Structure

Board	No.1 MBD-4X				No.2 MBD-4X			
Model Name	1XAxis	1YAxis	1ZAxis	1Taxis	2XAxis	2YAxis	2ZAxis	2Taxis
NEXIA-3X (Single)	Travers	Kick	Main Down		No.2 MBD is not in use			
NEXIA-5X (Single)	Travers	Kick	Main Down			Rotation	Swivel	

■ MBD-4X, 1X Connector Signal

Connector : 3M 20P Connector (5*4 Colum)

Signal (Yaskawa Motor Sigma-III)

Pin	Signal	Direction	Sigma-III No.	Yaskawa Driver Signal name
01	PLS/CW-	OUT	08	/PULS
02	PLS/CW+	OUT	07	PULS
03	DIR/CCW-	OUT	12	/SIGN
04	DIR/CCW+	OUT	11	SIGN
05	PULSE_CLR-	OUT	14	/CLR
06	PULSE_CLR+	OUT	15	CLR
07	/S_ON	OUT	40	/S-ON
08	/P_CON	OUT	41	/P-CON
09	/ALM_RESET	OUT	44	/ALM-RST
10	P24V_OUT	OUT	47	+24VIN
11	/INPOS_COM	OUT	26	COIN-
12	/INPOS	IN	25	COIN+
13	/S_RDY_COM	OUT	30	/S-RDY-
14	/S_RDY	IN	29	/S-RDY+
15	CW_STOP	OUT	42	P-OT
16	CCW_STOP	OUT	43	N-OT
17	/ALM_COM	OUT	32	/ALM-
18	/ALM	IN	31	/ALM+
19	/SG	IN	01	SG
20	/EZ	IN	19	PCO
Frame	FG	-	Main Frame	FG

I.3 Setting for Motor Board

- Dip switch for Model Selection

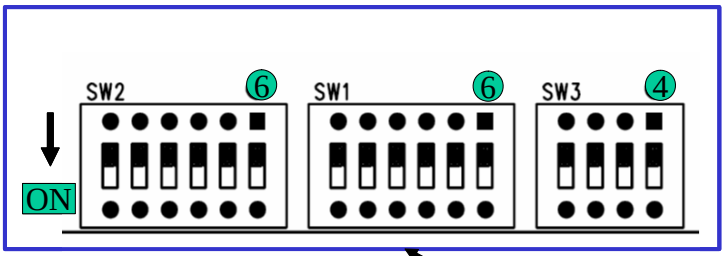

- Dip switch Setting

SW3 : Select On for not in use (ALARM signal Ignore)

When there is two board : The board next to BASE board is No.1

No.1 Board : All SW1 is ON, All SW2 is OFF (Board selection function)

No. 2Board : All SW1 is Off, All SW2 is ON (Board selection function)

It will cause serious machine malfucntion problem if setting is not right.

Board	Axis								No. 1 MBD-4X			No. 2 MBD-4X		
Model	1X	1Y	1Z	1T	2X	2Y	2Z	2T	SW1	SW2	SW3	SW1	SW2	SW3
NEXIA-3X	⊙	⊙	⊙						All is ON	All is Off	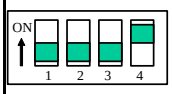	No User No.2 Board		
NEXIA-5X	⊙	⊙	⊙			⊙	⊙		All is ON	All is Off	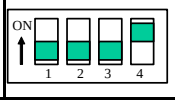	All is OFF	All is ON	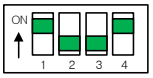

J. Middle Connection Board : IF

J.1 Middle Board Description and Connector

- Connect BASE board to Middle board X000, Y000, X010, Y010, X020, Y020 , 1:1 Connection
- 2P, 3P Molex Connector P is 24V, S is I/O signal, G is GND(Ground)
- Signal for output is 2P Connector, Input is 3P connector

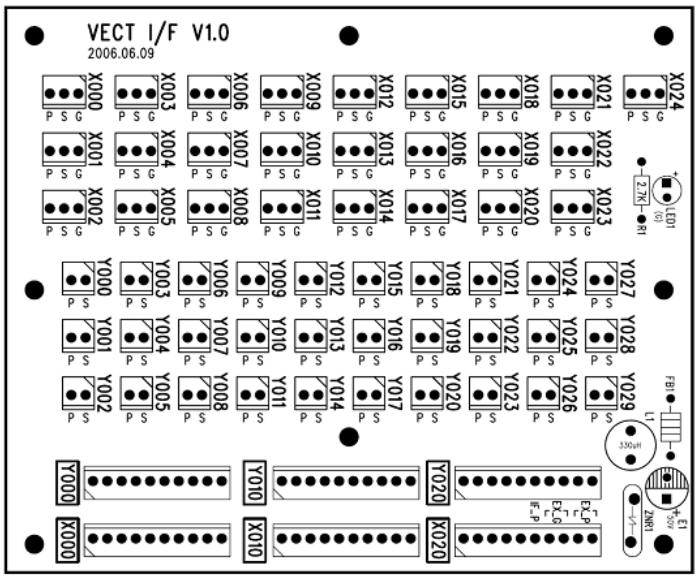

J.2 Connector Name (Same as BASE board)

Pin	J3	J6	J8	J2	J5	J7
01	X000	X010	X020	Y000	Y010	Y020
02	X001	X011	X021	Y001	Y011	Y021
03	X002	X012	X022	Y002	Y012	Y022
04	X003	X013	X023	Y003	Y013	Y023
05	X004	X014	X024	Y004	Y014	Y024
06	X005	X015	Not in Use	Y005	Y015	Y025
07	X006	X016	GND	Y006	Y016	Y026
08	X007	X017	GND	Y007	Y017	Y027
09	X008	X018	P24V	Y008	Y018	Y028
10	X009	X019	P24V	Y009	Y019	Y029

K. Interlock Board : IL

K.1 Interlock Board Description and Connector

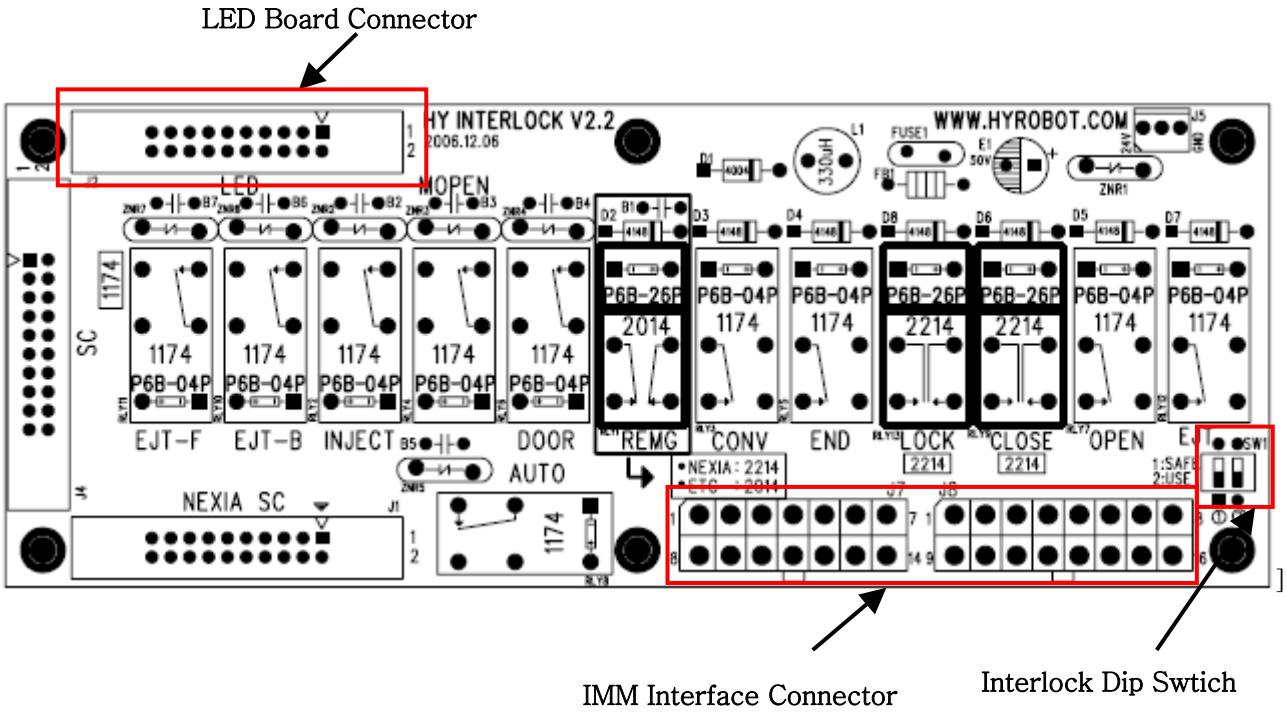

K.2 Interface Setting dip Switch

- For No.1 Switch is for E-Stop from IMM Connection, Off is for IMM E-stop Connect, ON for no connection of IMM E-Stop.

	SW1Setting
Use - No1 is OFF (IMM E-Stop connection required) If no connection, alarm will trigger	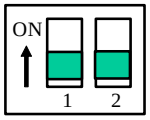
Not in Use - No 1 is ON (IMM E-Stop connection is not required)	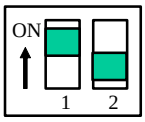

NEXIA-SY Electric Part List

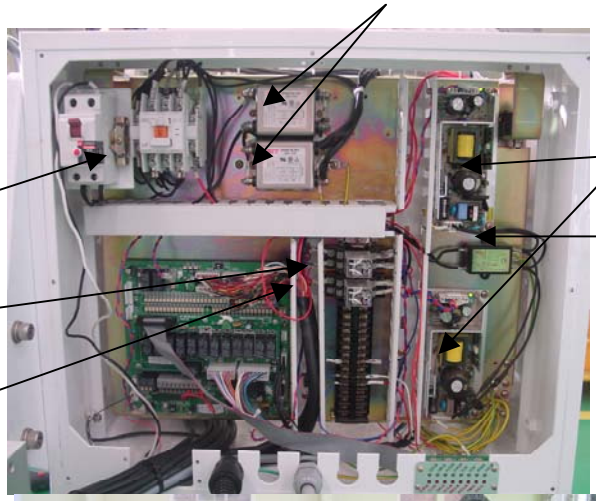

NFB	ABS33B-30A	LS cable
Noise Filter1	WYF-S06A2 6A	WOONYOUNG Co., LTD
Noise Filter2	FTN-E20H-CM-20A	FINE SUNTRONIX CO., LTD.
SMPS	HNPS756-24-N 3.1A	HYROBOTICS CO., LTD.
Relay	SZR-LY2-N1 24VDC	Honeywell
Relay Socket	KLY2	Korea Automatic Control Co., Inc
Motor Drive	SGDH-□□A	YASKAWA ELECTRIC CORPORATION

NO.	REVISIONS	DATE	APPROVE	REMARK

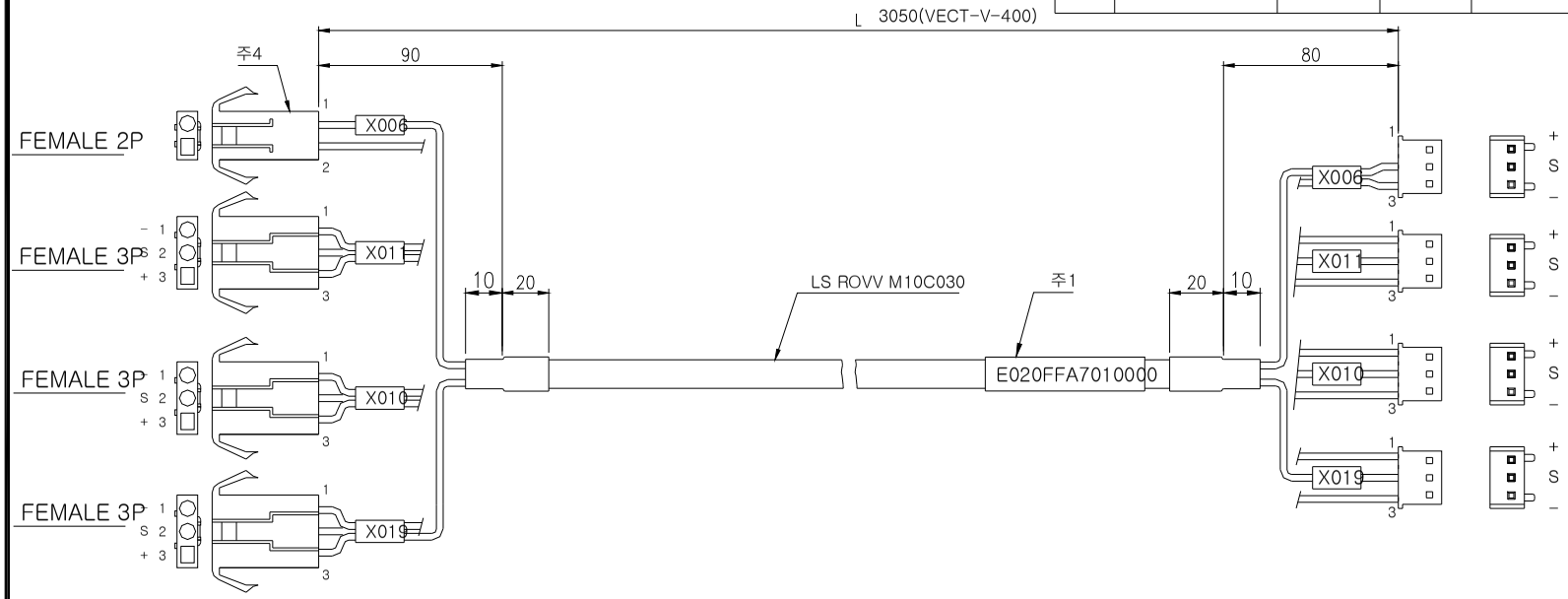

SENSOR SIDE MOLEX FEMALE

IF SIDE MOLEX-5102 3P

SONSOR SIDE							
NUMBER TUBE: X019		NUMBER TUBE: X010		NUMBER TUBE: X011		NUMBER TUBE: X006	
PIN	COLOR	PIN	COLOR	PIN	COLOR	PIN	COLOR
1	GREEN	1	RGEEN+BLACK	1	ORANGE	1	BLUE+WHITE
2	WHITE	2	WHITE+BLACK	2	GRAY	2	YELLOW+BLACK
3	RED	3	RED+WHITE	3	BROWN		

IF SIDE							
NUMBER TUBE: X019		NUMBER TUBE: X010		NUMBER TUBE: X011		NUMBER TUBE: X006	
PIN	COLOR	PIN	COLOR	PIN	COLOR	PIN	COLOR
1	RED	1	RED+WHITE	1	BROWN	1	-
2	WHITE	2	WHITE+BLACK	2	GRAY	2	YELLOW+BLACK
3	GREEN	3	GREEN+BLACK	3	ORANGE	3	BULE+WHITE

	SENSOR INTERFACE CABLE					
ITEM	DESCRIPTION	MATERIAL	Q'TY	SIZE	REMARK	

A3 Scale: 1 / 1.5	Drawn	Design	Check	Approve	Project	VECT-SA
Unit M/M					Draw No.	Part no. E020FFA7010000
Date: '06.09.11						

NO.	REVISIONS	DATE	APPROVE	REMARK

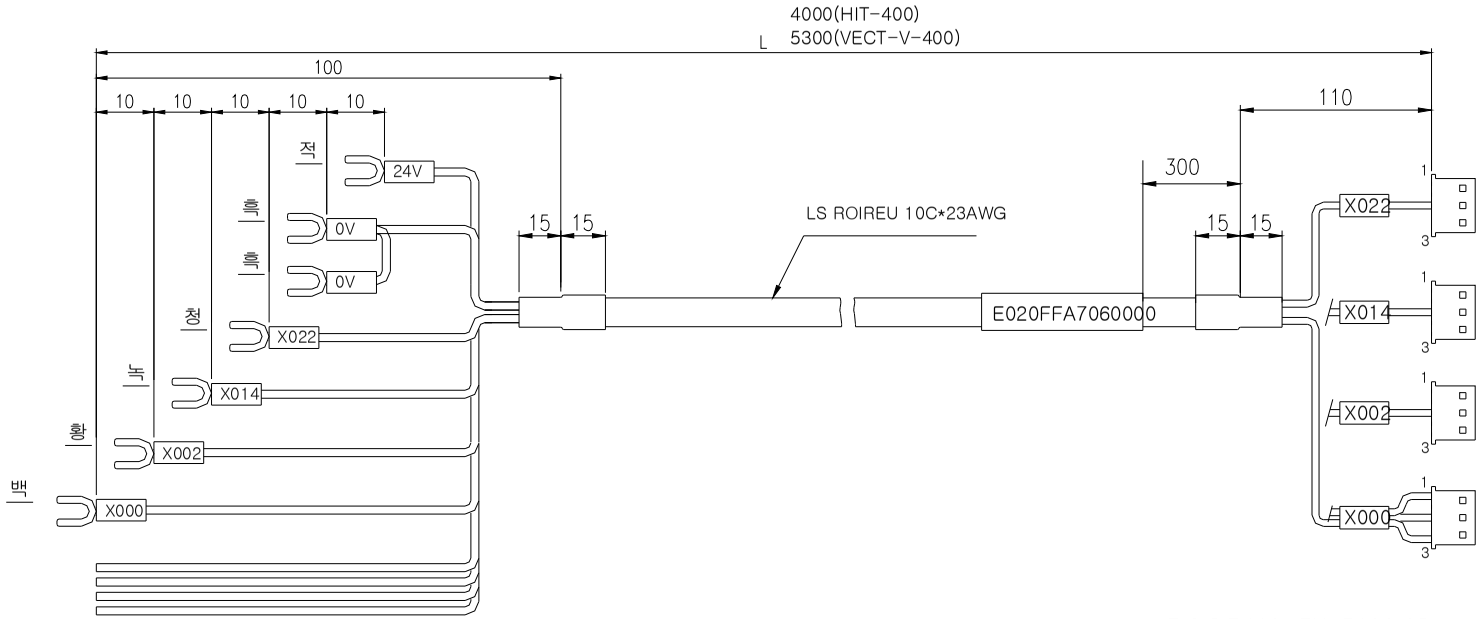

7P TERMINAL

IF SIDE MOLEX-5102 3P

IF SIDE							
NUMBER TUBE: X000		NUMBER TUBE: X002		NUMBER TUBE: X014		NUMBER TUBE: X022	
PIN	COLOR	PIN	COLOR	PIN	COLOR	PIN	COLOR
1	RED	1	-	1	-	1	-
2	WHITE	2	YELLOW	2	GREEN	2	BLUE
3	BLACK	3	-	3	-	3	-

	SENSOR INTERFACE CABLE					
ITEM	DESCRIPTION	MATERIAL	Q'TY	SIZE	REMARK	
A3 Scale: 1 / 1.5	Drawn	Design	Check	Approve	Project	VECT-V-200
Unit M/M					Draw No.	Part no. E020FFA7060000
Date: '06.09.11						

NO.	REVISIONS	DATE	APPROVE	REMARK

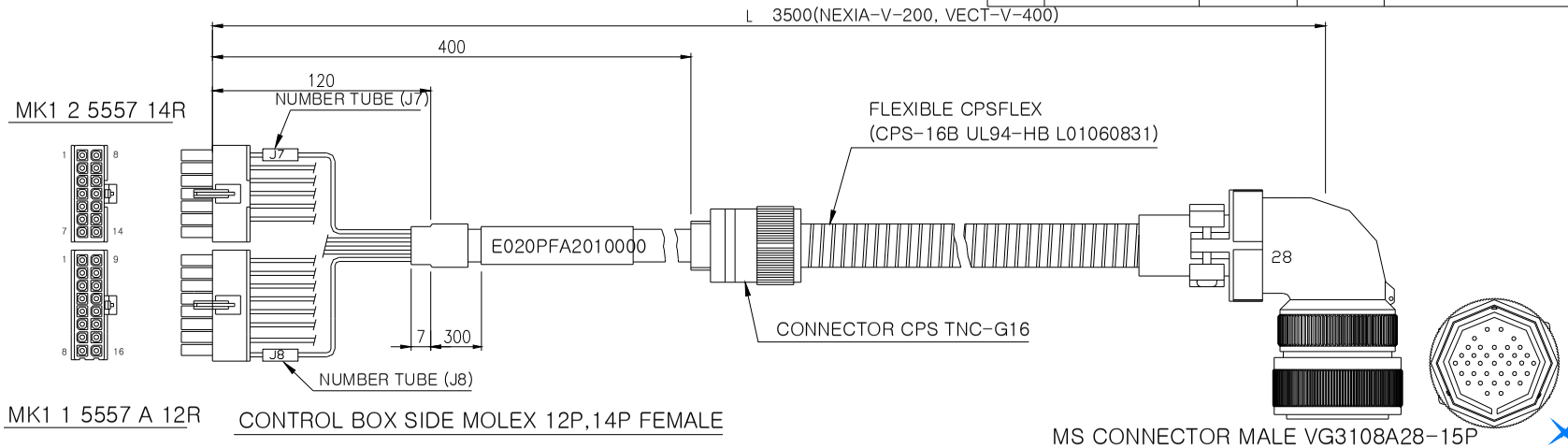

CONTROL BOX SIDE MOLEX 12P,14P FEMALE

MS CONNECTOR MALE VG3108A28-15P

CONTROL BOX SIDE			
PIN NO.	COLOR	PIN NO.	COLOR
14-1	PINK+BLACK	16-1	WHITE+YELLOW
14-2	WHITE+BLACK	16-2	WHITE
14-3	SKY	16-3	VIOLET
14-4	WHITE+GRAY	16-4	BLACK
14-5	ORANGE+BLACK	16-5	BROWN
14-6	RED+BLACK	16-6	GREEN
14-7	VIOLET+WHITE	16-7	BLUE
14-8	GRAY+BLACK	16-8	BLACK+BLUE
14-9	PINK	16-9	WHITE+RED
14-10	YELLOW+BLACK	16-10	BLACK+YELLOW
14-11	BLACK+RED	16-11	RED
14-12	YELLOW	16-12	BLACK+WHITE
14-13	GRAY	16-13	GRAY+WHITE
14-14	ORANGE	16-14	GREEN+WHITE
		16-15	BLUE+WHITE

MS CONNECTOR			
PIN NO.	COLOR	PIN NO.	COLOR
A	BLACK+BLUE	S	RED
B	BLUE	T	ORANGE
C	GREEN	U	GRAY
D	BROWN	V	YELLOW
E	BLACK	W	BLACK+RED
F	VIOLET	X	YELLOW+BLACK
G	VIOLET+WHITE	Y	PINK
H	ORANGE+BLACK	Z	PINK+BLACK
J	RED+BLACK	a	WHITE+YELLOW
K	SKY+BLACK	b	WHITE
L	SKY	d	WHITE+RED
M	BLUE+WHITE	e	WHITE+BLACK
N	GREEN+WHITE	f	BLACK+YELLOW
P	BROWN+WHITE	g	WHITE+GRAY
R	BLACK+WHITE		

ITEM	DESCRIPTION	MATERIAL	Q'TY	SIZE	REMARK
	INTERLOCK CABLE 1				

A3	Scale: 1 / 1.5	Drawn	Design	Check	Approve
Unit M/M					
Date: '06.09.11					

Project	NEXIA-V-200
Draw No.	Part no. E020PFA2010000

HY ROBOTICS

NO.	REVISIONS	DATE	APPROVE	REMARK

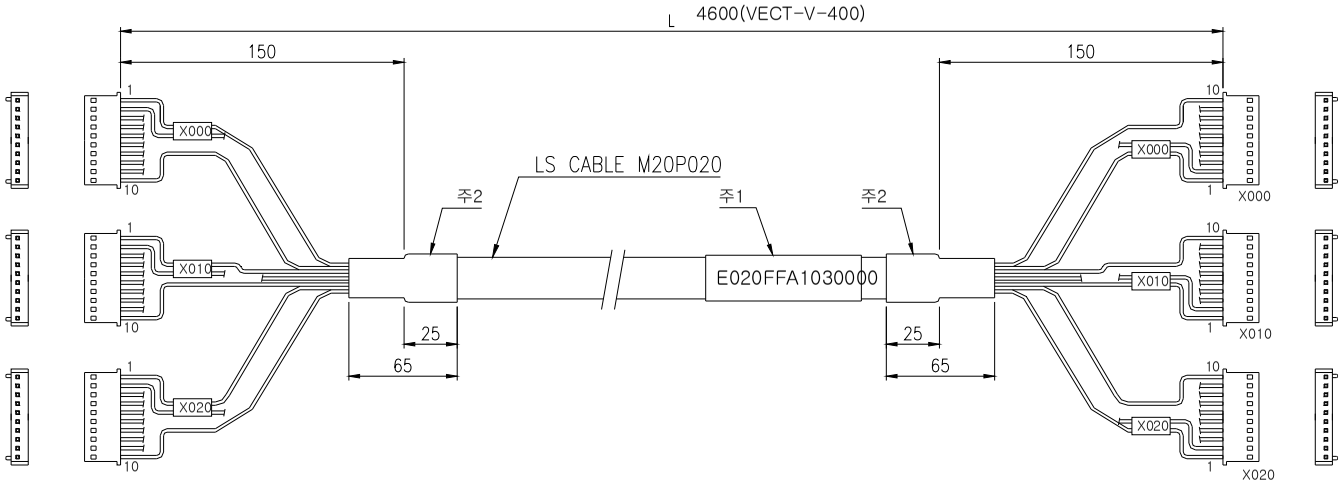

IF SIDE MOLEX-5102 10P

IF SIDE					
NUMBER TUBE: X000		NUMBER TUBE: X010		NUMBER TUBE: X020	
PIN NO.	COLOR	PIN NO.	COLOR	PIN NO.	COLOR
1	ORANGE(WHITE)	1	YELLOW(BLACK)	1	VIOLET(BLACK)
2	WHITE(ORANGE)	2	BLACK(YELLOW)	2	BLACK(VIOLET)
3	GRAY(WHITE)	3	BLACK(WHITE)	3	ORANGE(BLACK)
4	WHITE(GRAY)	4	WHITE(BLACK)	4	BLACK(ORANGE)
5	BLUE(WHITE)	5	RED(WHITE)	5	GRAY(BLACK)
6	WHITE(BLUE)	6	WHITE(RED)	6	BLACK(GRAY)
7	GREEN(WHITE)	7	BRWON(WHITE)	7	BLUE(BLACK)
8	WHITE(GREEN)	8	WHITE(BROWN)	8	BLACK(BLUE)
9	YELLOW(WHITE)	9	VIOLET(WHITE)	9	GREEN(BLACK)
10	WHITE(YELLOW)	10	WHITE(VIOLET)	10	BLACK(GREEN)

SC SIDE MOLEX-5102 10P

SC SIDE					
NUMBER TUBE: X000		NUMBER TUBE: X010		NUMBER TUBE: X020	
PIN NO.	COLOR	PIN NO.	COLOR	PIN NO.	COLOR
1	ORANGE(WHITE)	1	YELLOW(BLACK)	1	VIOLET(BLACK)
2	WHITE(ORANGE)	2	BLACK(YELLOW)	2	BLACK(VIOLET)
3	GRAY(WHITE)	3	BLACK(WHITE)	3	ORANGE(BLACK)
4	WHITE(GRAY)	4	WHITE(BLACK)	4	BLACK(ORANGE)
5	BLUE(WHITE)	5	RED(WHITE)	5	GRAY(BLACK)
6	WHITE(BLUE)	6	WHITE(RED)	6	BLACK(GRAY)
7	GREEN(WHITE)	7	BRWON(WHITE)	7	BLUE(BLACK)
8	WHITE(GREEN)	8	WHITE(BROWN)	8	BLACK(BLUE)
9	YELLOW(WHITE)	9	VIOLET(WHITE)	9	GREEN(BLACK)
10	WHITE(YELLOW)	10	WHITE(VIOLET)	10	BLACK(GREEN)

	I/O CABLE				
ITEM	DESCRIPTION	MATERIAL	Q'TY	SIZE	REMARK

A3 Scale: 1 / 1.5	Drawn	Design	Check	Approve	Project	VECT-V-200
Unit M/M					Draw No.	Part no. E020FFA1030000
Date: 06.09.11						

HY ROBOTICS

NO.	REVISIONS	DATE	APPROVE	REMARK

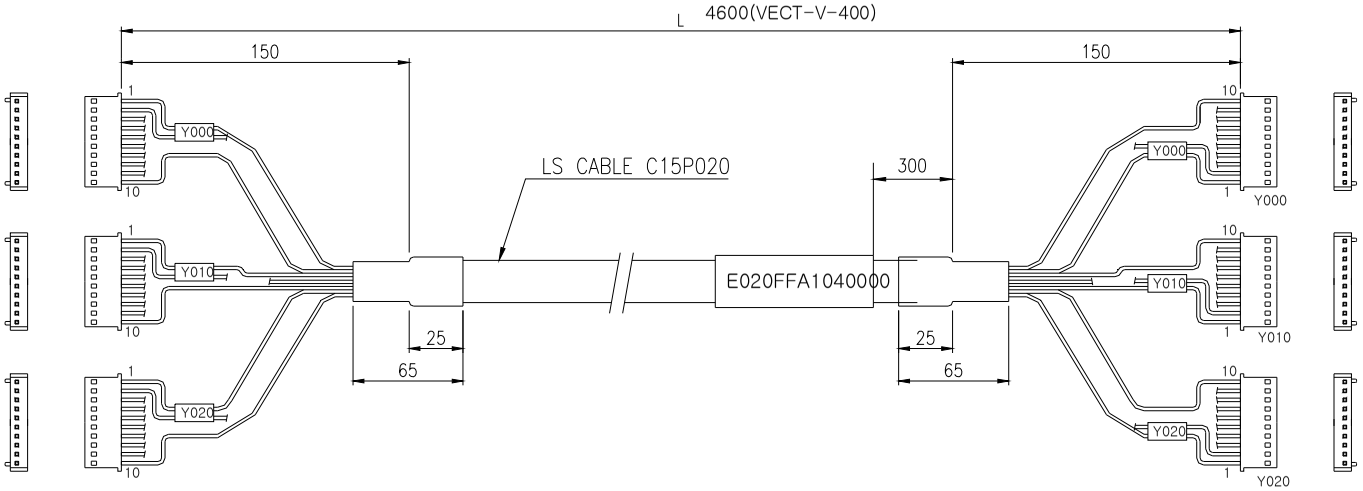

IF SIDE MOLEX-5102 10P

IF SIDE					
NUMBER TUBE: X000		NUMBER TUBE: X010		NUMBER TUBE: X020	
PIN NO.	COLOR	PIN NO.	COLOR	PIN NO.	COLOR
1	BRWON(WHITE)	1	BRWON(BLACK)	1	BROWN(RED)
2	WHITE(BROWN)	2	BLACK(BROWN)	2	RED(BRWON)
3	ORANGE(WHITE)	3	ORANGE(BLACK)	3	ORANGE(RED)
4	WHITE(ORANGE)	4	BLACK(ORANGE)	4	RED(ORANGE)
5	GRAY(WHITE)	5	GRAY(BLACK)	5	GRAY(RED)
6	WHITE(GRAY)	6	BLACK(GRAY)	6	RED(GRAY)
7	GREEN(WHITE)	7	GREEN(BLACK)	7	GREEN(RED)
8	WHITE(GREEN)	8	BLACK(GREEN)	8	RED(GREEN)
9	YELLOW(WHITE)	9	YELLOW(BLACK)	9	YELLOW(RED)
10	WHITE(YELLOW)	10	BLACK(YELLOW)	10	RED(YELLOW)

SC SIDE MOLEX-5102 10P

SC SIDE					
NUMBER TUBE: X000		NUMBER TUBE: X010		NUMBER TUBE: X020	
PIN NO.	COLOR	PIN NO.	COLOR	PIN NO.	COLOR
1	BRWON(WHITE)	1	BRWON(BLACK)	1	BROWN(RED)
2	WHITE(BROWN)	2	BLACK(BROWN)	2	RED(BRWON)
3	ORANGE(WHITE)	3	ORANGE(BLACK)	3	ORANGE(RED)
4	WHITE(ORANGE)	4	BLACK(ORANGE)	4	RED(ORANGE)
5	GRAY(WHITE)	5	GRAY(BLACK)	5	GRAY(RED)
6	WHITE(GRAY)	6	BLACK(GRAY)	6	RED(GRAY)
7	GREEN(WHITE)	7	GREEN(BLACK)	7	GREEN(RED)
8	WHITE(GREEN)	8	BLACK(GREEN)	8	RED(GREEN)
9	YELLOW(WHITE)	9	YELLOW(BLACK)	9	YELLOW(RED)
10	WHITE(YELLOW)	10	BLACK(YELLOW)	10	RED(YELLOW)

	I/O CABLE				
ITEM	DESCRIPTION	MATERIAL	Q'TY	SIZE	REMARK

A3 Scale: 1 / 1.5	Drawn	Design	Check	Approve	Project	VECT-V-200
Unit M/M					Draw No.	Part no. E020FFA1040000
Date: '06.09.11						

HY ROBOTICS

NO.	REVISIONS	DATE	APPROVE	REMARK

MS CONNECTOR MALE VG3106A28-15P

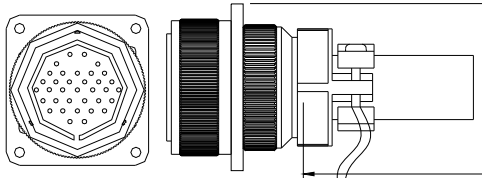

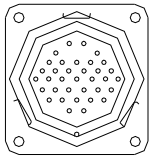

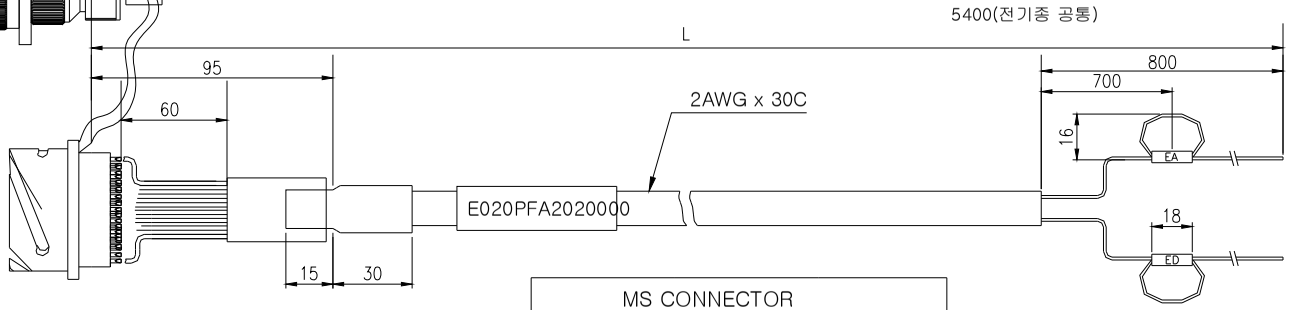

MS CONNECTOR FEMALE VG3102A28-15S

IMM SIDE

MS CONNECTOR				
PIN NO.	COLOR	CONNECT	PIN NO.	COLOR
B	BLUE	⊣	M	BLUE+WHITE
C	GREEN	⊣	N	GREEN+WHITE
D	BROWN	⊣	P	BROWN+WHITE
E	BLACK	⊣	R	BLACK+WHITE

MS CONNECTOR			
PIN NO.	COLOR	PIN NO.	COLOR
A	BLACK+BLUE	S	RED
B	BLUE	T	ORANGE+YELLOW
C	GREEN	U	GRAY
D	BROWN	V	YELLOW
E	BLACK	W	BLACK+RED
F	VIOLET	X	YELLOW+BLACK
G	VIOLET+WHITE	Y	PINK
H	ORANGE+BLACK	Z	PINK+BLACK
J	RED+BLACK	a	WHITE+YELLOW
COM K	SKY+BLACK	b	WHITE
L	SKY	d	WHITE+RED
M	BLUE+WHITE	e	WHITE+BLACK
N	GREEN+WHITE	f	BLACK+YELLOW
P	BROWN+WHITE	g	WHITE+GRAY
R	BLACK+WHITE		

IMM			
PIN NO.	COLOR	PIN NO.	COLOR
EA	RED+WHITE	D	ORANGE
M	BLUE	F	GRAY
K	GREEN	E	YELLOW
I	BROWN	R	BLACK+RED
G	BLACK	S	YELLOW+BLACK
OV	VIOLET	Q	PINK
EB	RED+BLUE	ED	BINK+BLACK
CY	YELLOW+RED	C1	WHITE+YELLOW
CV	RED+YELLOW	C	WHITE
RU	RED+GREEN	C2	WHITE+RED
EC	WHITE+RED	C3	WHITE+BLACK
N	WHITE	C4	WHITE+GRAY
L	SKY	C5	BLACK+YELLOW
J	WHITE		
H	SKY		

ITEM	DESCRIPTION	MATERIAL	Q'TY	SIZE	REMARK
	INTERLOCK CABLE 2				

A3	Scale: 1 / 1.5	Drawn	Design	Check	Approve	Project: NEXIA-V-200
Unit M/M						Draw No. / Part no. E020PFA2020000
Date: '06.09.11						

HY ROBOTICS

NO.	REVISIONS	DATE	APPROVE	REMARK

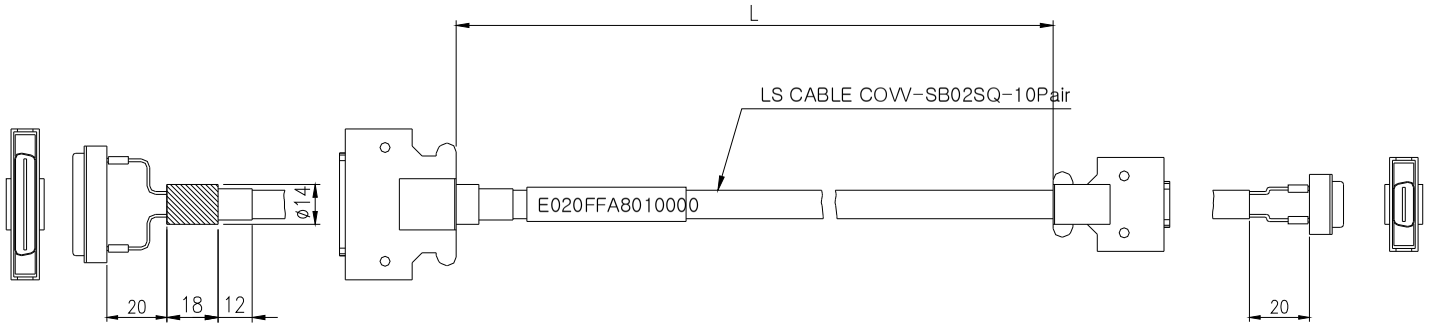

MOTOR DRIVE SIDE 3M-10350 Connector MALE 50P

MOTOR DRIVE SIDE									
PIN NO.	COLOR	PIN NO.	COLOR	PIN NO.	COLOR	PIN NO.	COLOR	PIN NO.	COLOR
1	BLACK(BROWN)	11	GREEN(WHITE)	21	.	31	.	41	GRAY(WHITE)
2	.	12	WHITE(GREEN)	22	.	32	.	42	BLACK(ORANGE)
3	.	13	.	23	.	33	.	43	ORANGE(BLACK)
4	.	14	WHITE(ORANGE)	24	.	34	.	44	WHITE(BROWN)
5	.	15	ORANGE(WHITE)	25	YELLOW(BLACK)	35	.	45	.
6	.	16	.	26	BLACK(YELLOW)	36	.	46	.
7	YELLOW(WHITE)	17	.	27	.	37	.	47	BROWN(WHITE)
8	WHITE(YELLOW)	18	.	28	.	38	.	48	.
9	.	19	BROWN(BLACK)	29	GREEN(BLACK)	39	.	49	.
10	.	20	.	30	BLACK(GREEN)	40	WHITE(GRAY)	50	.

SC SIDE 3M-10320 Connector MALE 20P

SC SIDE			
PIN NO.	COLOR	PIN NO.	COLOR
1	WHITE(YELLOW)	11	BLACK(YELLOW)
2	YELLOW(WHITE)	12	YELLOW(BLACK)
3	WHITE(GREEN)	13	BLACK(GREEN)
4	GREEN(WHITE)	14	GREEN(BLACK)
5	WHITE(ORANGE)	15	BLACK(ORANGE)
6	ORANGE(WHITE)	16	ORANGE(BLACK)
7	WHITE(GRAY)	17	BLACK(GRAY)
8	GRAY(WHITE)	18	GRAY(BLACK)
9	WHITE(GRAY)	19	BLACK(GRAY)
10	BROWN(WHITE)	20	BROWN(BLACK)

	CONTROL BOX CABLE				
ITEM	DESCRIPTION	MATERIAL	Q'TY	SIZE	REMARK

A3	Scale: 1 / 1.5	Drawn	Design	Check	Approve	Project: VECT-V-200
Unit M/M						Draw No. / Part no. E020FFA8010000
Date: '06.09.11						

NO.	REVISIONS	DATE	APPROVE	REMARK
1				

Total Assembly
NEXIA-V-2500S

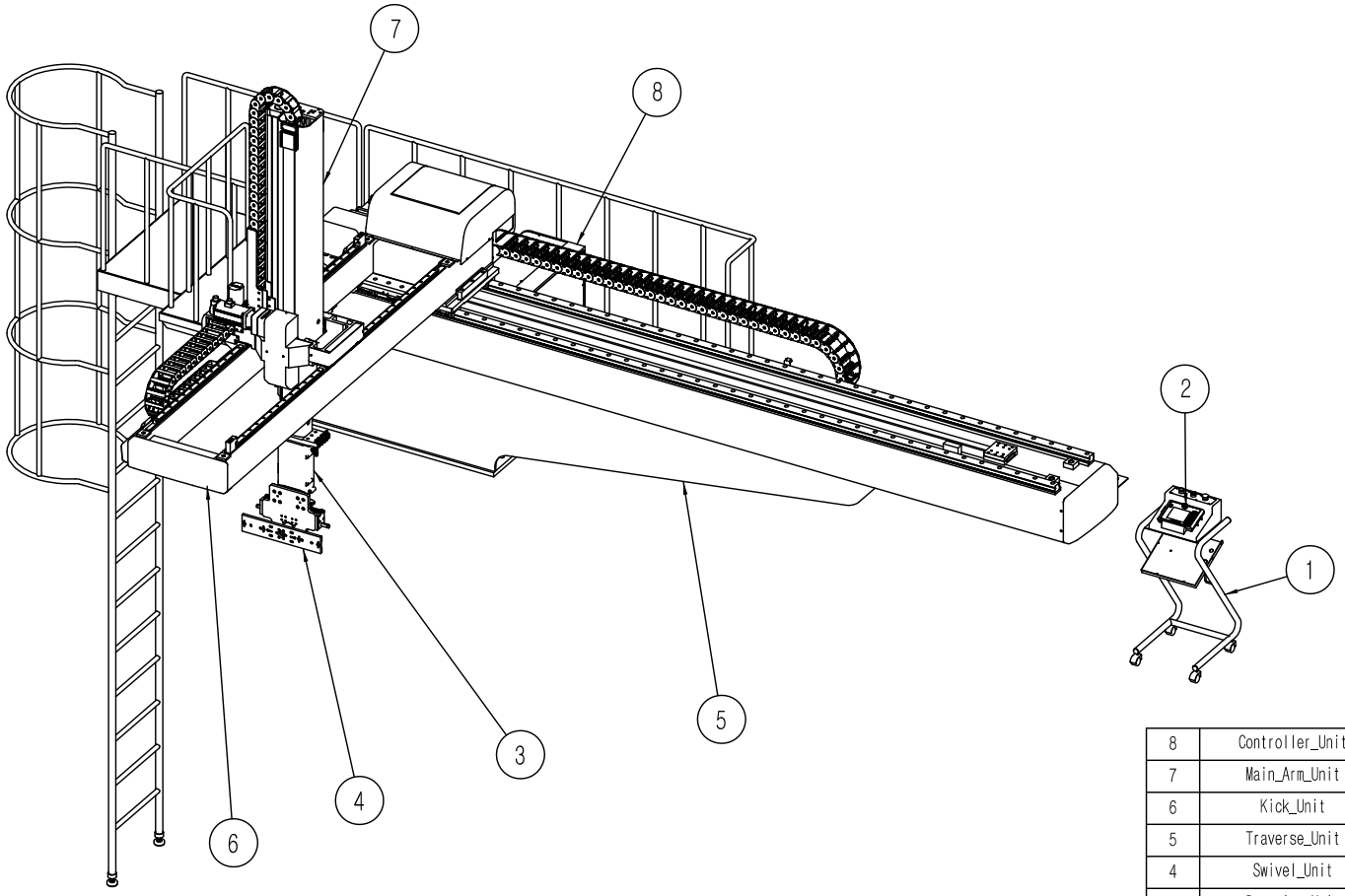

NO	DESCRIPTION	DRAWING NO	Q'TY	METERIAL	FINISH	REMARK
8	Controller_Unit	M250VDA9300000	1			
7	Main_Arm_Unit	M250VDA4000000	1			
6	Kick_Unit	M250VDA2000000	1			
5	Traverse_Unit	M250VDA1000000	1			
4	Swivel_Unit	M200HFA6000000	1			
3	Rotation_Unit	M200HFA5000000	1			
2	Touch_Pendant(5.7")	M015MAA8100000	1			
1	Stand_Assy(5.7")	M015MAA8000000	1			

표면 거칠기		일반공차	
~	-	0~6	±0.1
▽	100S	7~30	±0.2
▽▽	25S	31~120	±0.3
▽▽▽	6.3S	121~400	±0.4
▽▽▽▽	0.8S	401~1000	±0.5

TITLE	NEXIA-V-2500S			PART NAME	Total_Assembly
A3	SCALE: 0.032	DESIGN	CHECK	APPROVE	DRAWING NO.
UNIT :	M/M	p.w.jang			M250VDA0000000
DATE :	07.10.10.				

HYROBOTICS 한양로보틱스(주)

1. Traverse Unit

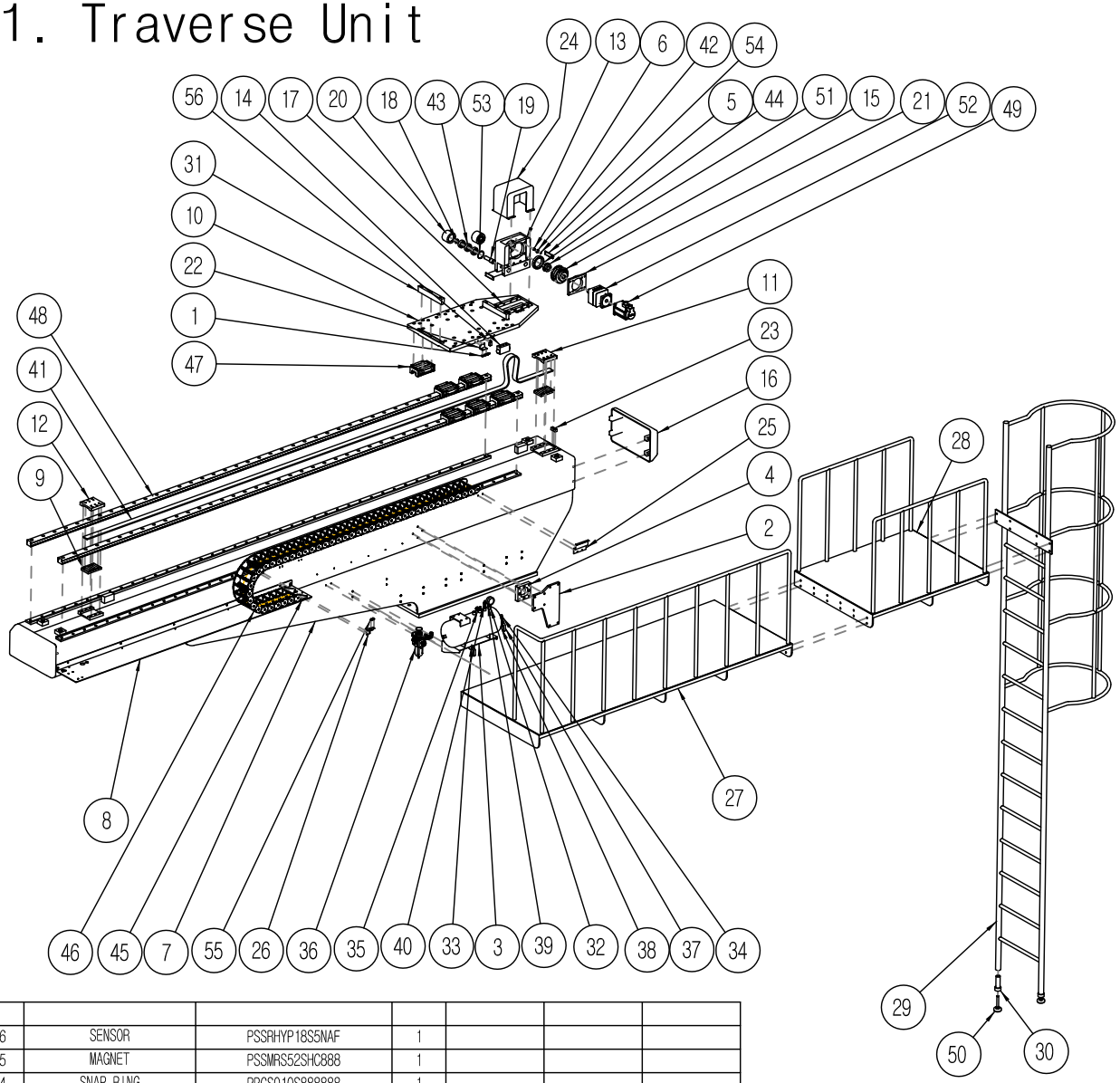

NO.	REVISIONS	DATE	APPROVE	REMARK
1				

NO	DESCRIPTION	DRAWING NO	Q'TY	METERIAL	FINISH	REMARK
43	BEARING	PBRA6305ZZ8888	6			
42	BEARING	PBRA6000ZZ8888	1			
41	TIMING_BELT	PBLTA205008888_5400	1			
40	VALVE	PAXZSAFVAL09K8	1			
39	PRESSURE_GAUGE	PAXZPG60A10K88	1			
38	COUPLER	PAXZMCM2408888	1			
37	BALL_VALVE	PAXXBALLVVPT12	2			
36	FILTER_REGULATOR_ASSY	PAXSTAW4000AS3	1			
35	FITTING	PAXFL4N1613128	1			
34	철ELBOW	PAXFELBOW12888	1			
33	FITTING	PAXFDOUBLEPT12	1			
32	FITTING	PAXBREDU143888	2			
31	GUIDE_BLOCK	M200HFA2018ZZ0	2			
30	LADDER_JOINT	M200HFA1028ZZ0	2			
29	LADDER	M200HFA1027PW0	1			
28	GUIDE_RAIL_M	M200HFA1026PW0	1			
27	GUIDE_RAIL_L	M200HFA1025PW0	1			
26	BRACKET	M200HFA1022MC0	1			
25	BRACKET	M200HFA1021ZZ0	1			
24	COVER	M200HFA1020ZZ0	1			
23	TENSION_BLOCK	M200HFA1019ZZ0	1			
22	BRACKET	M200HFA1018MC0	1			
21	REDUCER_PLATE	M200HFA1017ZZ0	1			
20	ROLLER	M200HFA1016ZZ0	2			
19	IDLE_SHAFT	M200HFA1015ZZ0	2			
18	COLLAR	M200HFA1014ZZ0	2			
17	BLOCK	M200HFA1013ZZ0	2			
16	TRA_COVER	M200HFA1011PW0	2			
15	TIMING_PULLEY	M200HFA1009ZZ0	1			
14	STOPPER	M200HFA1008ZZ0	1			
13	MOTOR_BLOCK	M200HFA1006MC0	1			
12	GRIPPER_BLOCK	M200HFA1005ZZ0	1			
11	GRIPPER_BLOCK	M200HFA1004ZZ0	1			
10	SLIDE_BASE	M200HFA1003ZZ0	1			
9	BELT_GRIPPER	M200HFA1002MC0	2			
8	C/V_PLATE	M200GGA1007ZZ0	1			
7	BODY	M200GGA1001PW0	1			
6	GUIDE_SHAFT	M130MAA4030ZZ0	1			
5	BLOCK	M130HFA2031MC0	2			
4	SPACER	M130HFA1013PW0	1			
3	AIR_TANK	M055MAA1016PW0	1			
2	PLATE	M020HFA1021PW0	1			
1	SENSOR_CABLE	E020PFA5010030	1			

56	SENSOR	PSSRHYP18S5NAF	1			
55	MAGNET	PSSMRS52SHC888	1			
54	SNAP_RING	PRGS010S888888	1			
53	SNAP_RING	PRGH062H888888	2			
52	REDUCER	PRESSF15EMR158	1			
51	POWER_LOCK	PPLMDR13332608	1			
50	LEVELLING_FOOT	PMXBYFNS161308	2			
49	SERVO_MOTOR	PMTBRFS1538888	1			
48	LM-RAIL	PLMRSAH554860L	2			
47	LM-BLOCK	PLMBSAH55EM888	6			
46	C/V_LINK	PCVH070NB15088_45	1			
45	C/V_END_B/K	PCVE070NB15088	1			
44	BEARING	PBRA6916ZZ8888	1			

표면 거칠기		일반공차	
~	-	0~6	±0.1
▽	100S	7~30	±0.2
▽▽	25S	31~120	±0.3
▽▽▽	6.3S	121~400	±0.4
▽▽▽▽	0.8S	401~1000	±0.5

TITLE	NEXIA-V-2500S			PART NAME	Traverse_Unit
A3	SCALE: 0.025	DESIGN	CHECK	APPROVE	DRAWING NO.
UNIT :	M/M	p.w.jang			M250VDA1000000
DATE :	07.10.10.				

HYROBOTICS 한양로보틱스(주)

2. Kick Unit

NO.	REVISIONS	DATE	APPROVE	REMARK
1				

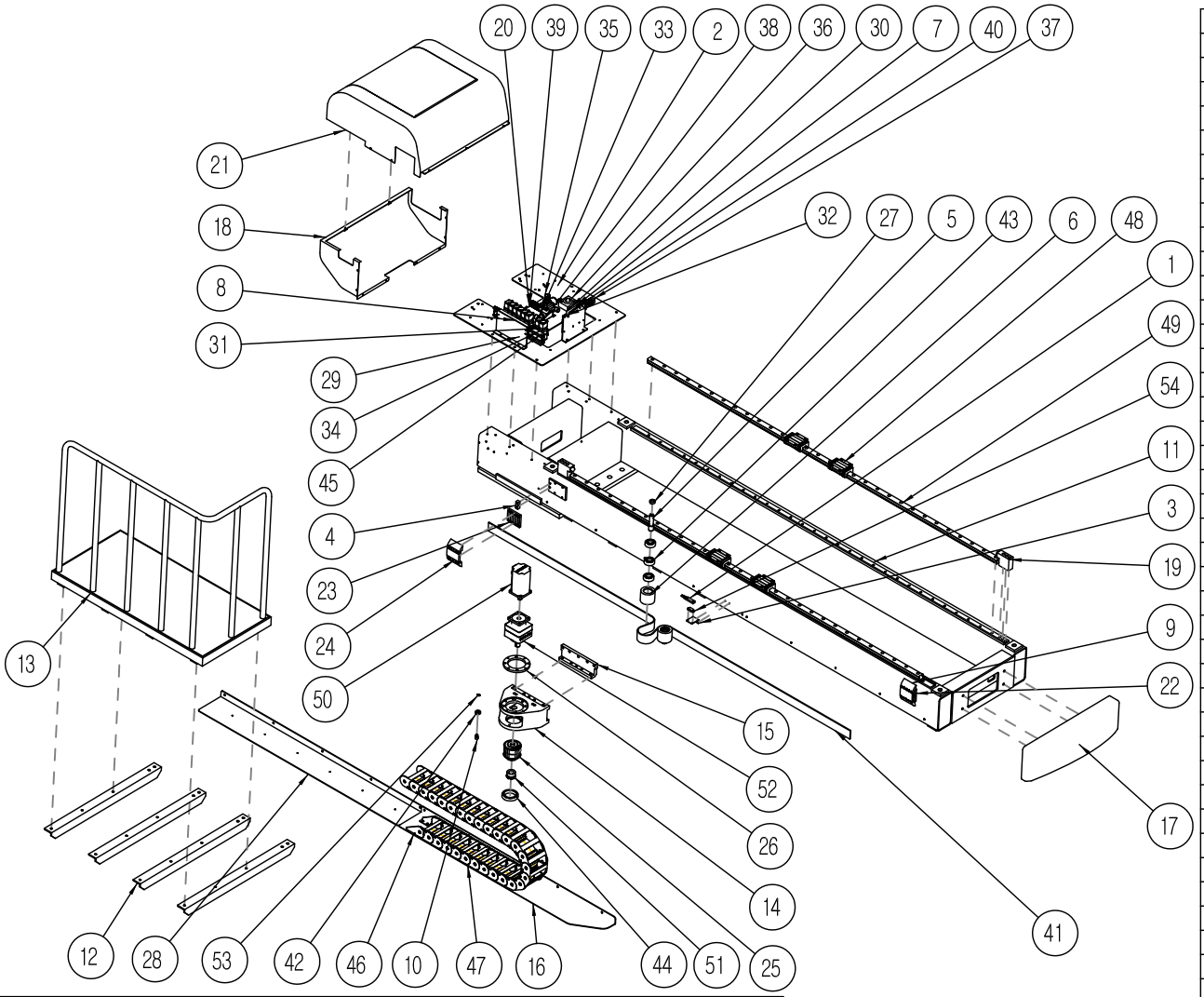

43	BEARING	PBRA6304ZZ8888	6			
42	BEARING	PBRA6000ZZ8888	1			
41	TINING_BELT	PBLTA105008888_2710	1			
40	I/F_BOARD	PBDCIFVECT8888	1			
39	SILINCER	PAXZSILENCER12	1			
38	SOLENOID_V/V	PAXXSV2104L888	2			
37	VACUUM_PUMP	PAXVAV020HS888	1			
36	VUCCUM_AIR_FILTER	PAXVAF06888888	1			
35	POWER_V/V	PAXSVEX133304G	1			
34	MANIFOLD	PAXMMSV2000288	1			
33	FITTING	PAXFEL12120888	2			
32	FITTING	PAXFEL08140888	2			
31	FITTING	PAXFEC08140888	4			
30	FITTING	PAXFDOUBLEPT14	4			
29	SOL_VALVE_ASSY	M250GFA2100000	1			
28	CAVBLEVOR_B/K	M200HFA2028ZZ0	1			
27	COLLAR	M200HFA2027ZZ0	2			
26	REDUCER_PLATE	M200HFA2024ZZ0	1			
25	TIMING_PULLEY	M200HFA2021ZZ0	1			
24	GRIPPER_BLOCK	M200HFA2016MC0	1			
23	BELT_GRIPPER	M200HFA2015MC0	1			
22	BELT_GRIPPER	M200HFA2014MC0	1			
21	COVER	M200HFA2013ZZ0	1			
20	PLATE	M200HFA2012ZZ0	1			
19	STOPPER	M200HFA2011ZZ0	2			
18	COVER	M200HFA2010ZZ0	1			
17	COVER	M200HFA2009ZZ0	1			
16	CABLE_V/Y_B/K	M200HFA2008ZZ0	1			
15	JOINT_BLOCK	M200HFA2007ZZ0	1			
14	MOTOR_BLOCK	M200HFA2006MC0	1			
13	GUARD_RAIL	M200HFA2003PW0	1			
12	GUARD_ANGLE	M200HFA2002PW0	4			
11	PULLOUT_FRAME	M200HFA2001PW0	1			
10	GUIDE_SHAFT	M130MAA4030ZZ0	1			
9	GRIPPER_BLOCK	M130MAA4021MC0	1			
8	SOL_V/V_PLATE	M130HFA2029ZZ0	1			
7	BRACKET	M130HFA2014ZZ0	1			
6	IDLE_ROLLER	M080HFA2010ZZ0	2			
5	IDLE_SHAFT	M080HFA2007ZZ0	2			
4	TENSION_BLOCK	M055MAA1004NI0	1			
3	BRACKET	M015MAB1018MC0	1			
2	MOVING_BRACKET	HSSP070N-B150M	1			
1	SENSOR_CABLE	E020PFA5020030	1			
NO	DESCRIPTION	DRAWING NO	Q'TY	METERIAL	FINISH	REMARK

54	MAGNET	PSSMRS52SHC888	1			
53	SNAP_RING	PRGS010S888888	1			
52	REDUCER	PRESSF15DMK738	1			
51	POWER_LOCK	PPLMMA24428888	1			
50	SERVO_MOTOR	PMTBKFS073A888	1			
49	LM-RAIL	PLMRSAH302360L	2			
48	LM-BLOCK	PLMBSAH30EM888	4			
47	C/V_LINK	PCVH6252312588_27	1			
46	C/V_END_B/K	PCVE6252300088	1			
45	SOCKET_BOLT	PBTRPT01040ZB0	3			
44	BEARING	PBRA6911ZZ8888	1			

표면 거칠기		일반공차	
~	-	0~6	±0.1
▽	100S	7~30	±0.2
▽▽	25S	31~120	±0.3
▽▽▽	6.3S	121~400	±0.4
▽▽▽▽	0.8S	401~1000	±0.5

TITLE NEXIA-V-2500S			PART NAME Kick_Unit	
A3	SCALE : 0.040	DESIGN	CHECK	APPROVE
UNIT : M/M		p.w.jang		
DATE : 07.10.10.				
DRAWING NO. M250VDA2000000				

HYROBOTICS 한양로보틱스(주)

4. Main Arm Unit (1)

NO.	REVISIONS	DATE	APPROVE	REMARK
1				

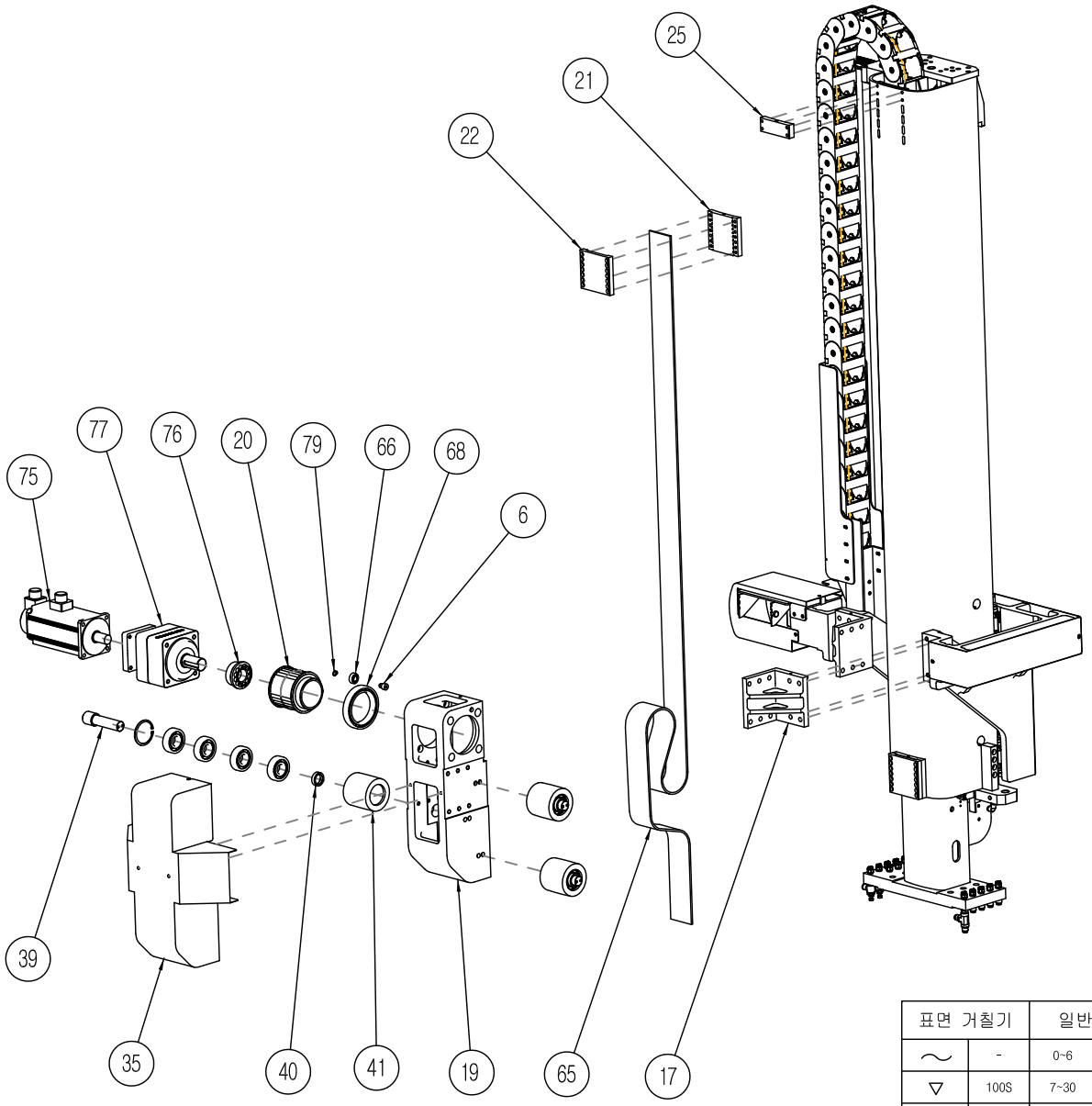

NO	DESCRIPTION	DRAWING NO	Q'TY	METERIAL	FINISH	REMARK
44	GRIPPER_BLOCK	M200HFA4048MC0	1			
43	PLATE	M200HFA4046ZZ0	1			
42	JOINT	M200HFA4045ZZ0	1			
41	ROLLER	M200HFA4044ZZ0	3			
40	COLLAR	M200HFA4042ZZ0	3			
39	IDLE_SHAFT	M200HFA4041ZZ0	3			
38	ROLLER_SHAFT	M200HFA4040ZZ0	1			
37	COLLAR	M200HFA4039ZZ0	4			
36	COVER	M200HFA4037ZZ0	1			
35	COVER	M200HFA4036ZZ0	1			
34	COVER	M200HFA4035ZZ0	1			
33	PULLEY_COVER	M200HFA4034ZZ0	1			
32	CYL_BLOCK	M200HFA4032ZZ0	1			
31	BLOCK	M200HFA4031ZZ0	2			
30	BLOCK	M200HFA4030ZZ0	1			
29	BRACKET	M200HFA4029ZZ0	1			
28	C/V_B/K	M200HFA4028ZZ0	1			
27	C/V_B/K	M200HFA4027ZZ0	1			
26	COVER	M200HFA4025ZZ0	1			
25	TENTION_BLOCK	M200HFA4024ZZ0	1			
24	NUT_PLATE	M200HFA4023ZZ0	1			
23	NUT_PLATE	M200HFA4022ZZ0	2			
22	BELT_GRIPPER	M200HFA4021ZZ0	2			
21	BELT_GRIPPER	M200HFA4020MC0	2			
20	TIMING_PULLEY	M200HFA4018ZZ0	1			
19	VER_MOTOR_BLOCK	M200HFA4017MC0	1			
18	BLOCK	M200HFA4016ZZ0	1			
17	BLOCK	M200HFA4015ZZ0	1			
16	BELT_GRIPPER	M200HFA4014MC0	1			
15	BELT_GRIPPER	M200HFA4013ZZ0	1			
14	BELT_GRIPPER	M200HFA4011ZZ0	1			
13	BELT_GRIPPER	M200HFA4010ZZ0	1			
12	PLATE	M200HFA4008ZZ0	1			
11	IDLE_ROLLER	M200HFA4007ZZ0	2			
10	ROLLER_SHAFT	M200HFA4006ZZ0	1			
9	PULLEY_SUPPORT	M200HFA4005ZZ0	2			
8	PLATE	M200HFA4004ZZ0	1			
7	VER_BASE	M200HFA4001MC0	1			
6	GUIDE_SHAFT	M130MAA4030ZZ0	1			
5	BELT_GRIPPER	M130MAA4014MC0	2			
4	BELT_GRIPPER	M130MAA4012ZZ0	1			
3	PLATE	M130HFA4040ZZ0	1			
2	C/V_END_B/K	HSP0625-2BN-M	1			
1	C/V_END_B/K	HSP0625-1BN-M	1			

표면 거칠기		일반공차	
~	-	0~6	±0.1
▽	100S	7~30	±0.2
▽▽	25S	31~120	±0.3
▽▽▽	6.3S	121~400	±0.4
▽▽▽▽	0.8S	401~1000	±0.5

TITLE	NEXIA-V-2500S			PART NAME Main_Arm_Unit
A3	SCALE: 0.080	DESIGN	CHECK	APPROVE
UNIT : M/M		p.w.jang		DRAWING NO. M250VDA4000000
DATE : 07.10.10.				

HYROBOTICS 한양로보틱스(주)

[SHEET 1 OF 2]

4. Main Arm Unit (2)

NO.	REVISIONS	DATE	APPROVE	REMARK
1				

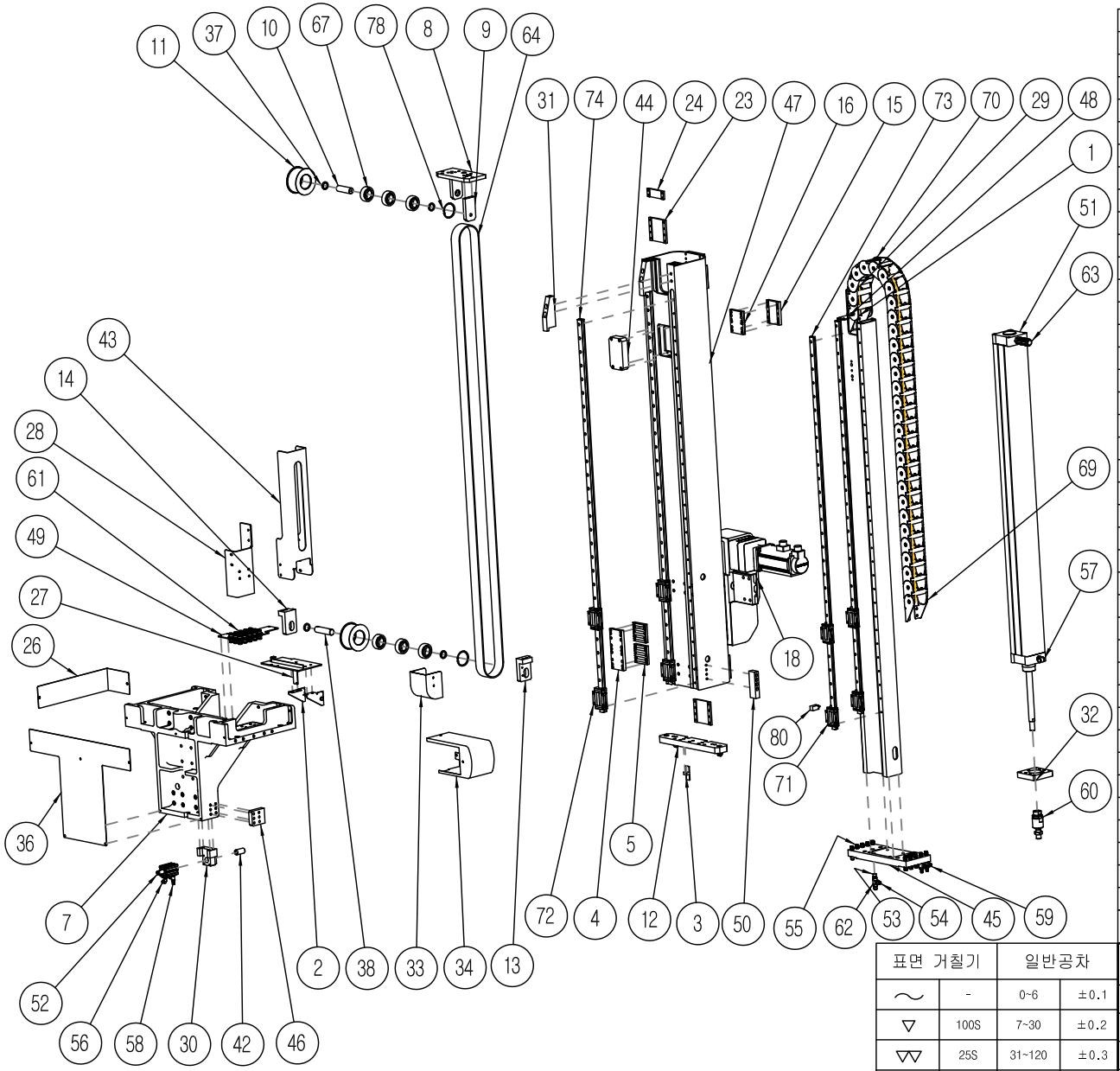

NO	DESCRIPTION	DRAWING NO	Q'TY	METERIAL	FINISH	REMARK
80	SENSOR	PSSRHYP18S5NAF	1			
79	SNAP_RING	PRGS010S888888	1			
78	SNAP_RING	PRGH062H888888	5			
77	REDUCER	PRESSF15EMR208	1			
76	POWER_LOCK	PPLMDR13332608	1			
75	SERVO_MOTOR	PMTBRFS203B888	1			
74	LM-RAIL	PLMRSAH251720L	2			
73	LM-RAIL	PLMRSAH201720L	2			
72	LM-BLOCK	PLMBSAH25EM888	4			
71	LM-BLOCK	PLMBSAH20EM888	4			
70	C/V_LINK	PCVH6251B12588-29	1			
69	C/V_END_B/K	PCVE6251300088	1			
68	BEARING	PBRA6916ZZ8888	1			
67	BEARING	PBRA6305ZZ8888	18			
66	BEARING	PBRA6000ZZ8888	1			
65	TIMING_BELT	PBLTA107508888_2470	1			
64	TIMING_BELT	PBLTA105008888_4090	1			
63	SILINCER	PAXZSILENCER12	1			
62	FITTING	PAXFSERVICET14	1			
61	FITTING	PAXFPMM0888888	15			
60	FLOATING_JOINT	PAXFKM20X15888	1			
59	SPEED_CON	PAXFESC0814888	2			
58	SPEED_CON	PAXFESC0618888	1			
57	FITTING	PAXFEL12120888	1			
56	FITTING	PAXFEL06180888	3			
55	FITTING	PAXFEC08140888	17			
54	FITTING	PAXFEC06140888	6			
53	FITTING	PAXFD0UBLEPT14	1			
52	CYLINDER	PAXAIDFW32AS25	1			
51	CYLINDER	PAXADNC1001300	1			
50	SUPPORT_BLOCK	M300GAA4027N10	2			
49	COVER	M250HFA4038ZZ0	1			
48	VERTICAL_FILE_#2	M250GFA4003MC0	1			
47	VERTICAL_FILE_#1	M250GFA4002MC0	1			
46	STOPPER_BLOCK	M200HFA4053ZZ0	1			
45	PLATE	M200HFA4052ZZ0	1			

표면 거칠기		일반공차	
~	-	0~6	±0.1
▽	100S	7~30	±0.2
▽▽	25S	31~120	±0.3
▽▽▽	6.3S	121~400	±0.4
▽▽▽▽	0.8S	401~1000	±0.5

TITLE	NEXIA-V-2500S		PART NAME	Main_Arm_Unit
A3	SCALE: 0.050	DESIGN	CHECK	APPROVE
UNIT : M/M	p.w.jang			DRAWING NO.
DATE : 07.10.10.				M250VDA4000000

HYROBOTICS 한양로보틱스(주)

[SHEET 2 OF 2]

5. Rotation Unit

NO.	REVISIONS	DATE	APPROVE	REMARK
1				

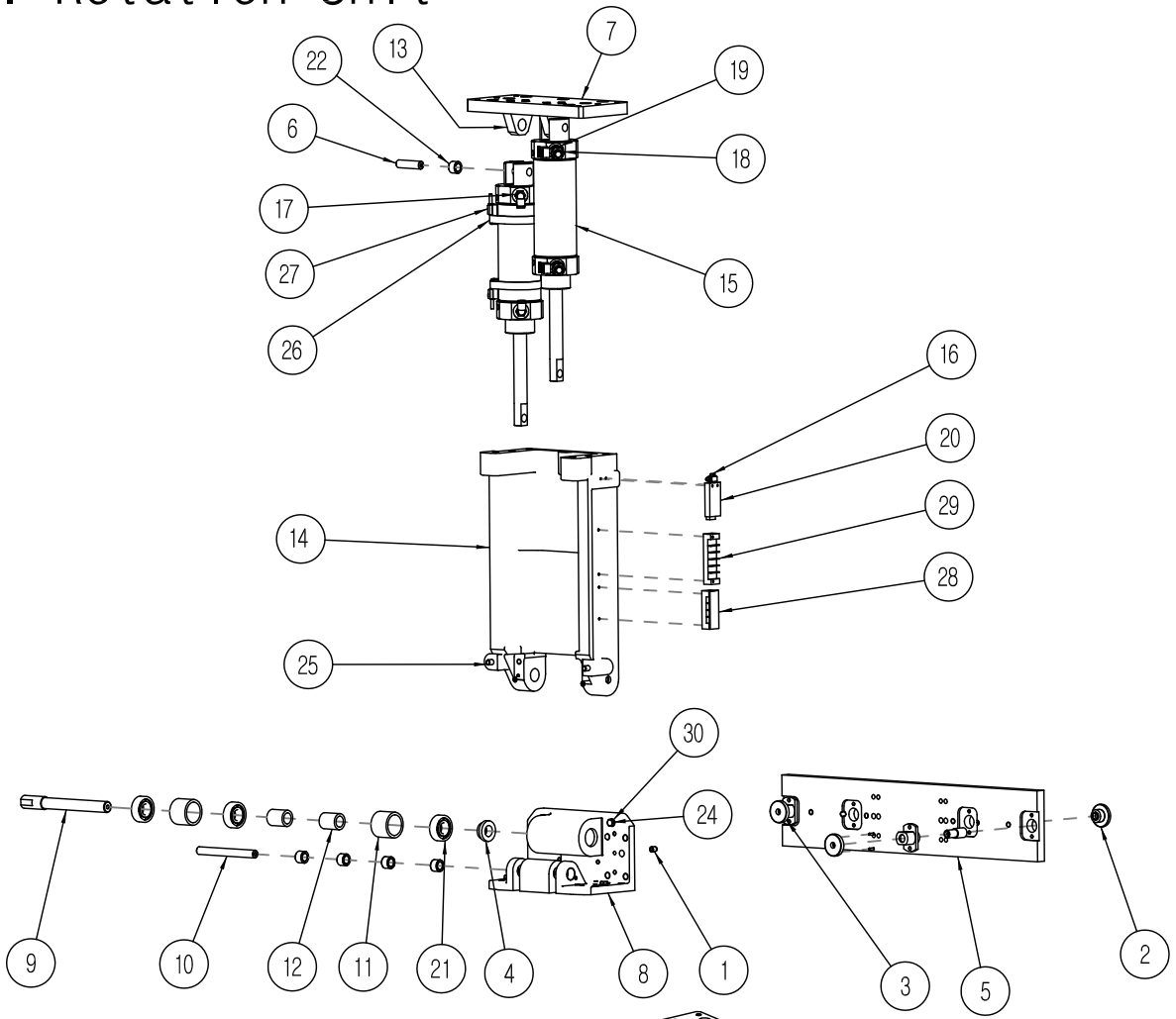

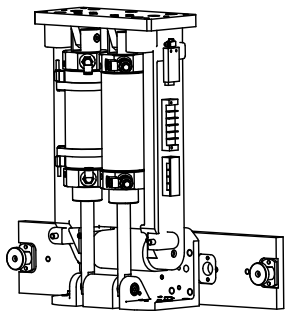

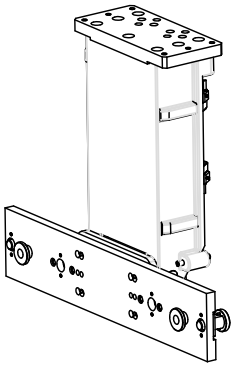

NO	DESCRIPTION	DRAWING NO	Q'TY	METERIAL	FINISH	REMARK
30	WASHER	PWSPM006000ZCA	4			
29	TERMINAL	PTLA06P8888888	1			
28	TERMINAL	PTLA04P8888888	1			
27	SENSOR	PSS0R0SW888888	2			
26	SENSOR_BAND	PSS080BAND8888	2			
25	STOPPER_BOLT	PBTTM008060MC0	4			
24	BOLT	PBTSM006008ZC0	4			
23	PANHEAD_BOLT	PBTDM005008ZC0	2			
22	ROLLER_BEARING	PBRNFJH1212ZZ8	6			
21	BEARING	PBRA6203ZZ8888	3			
20	SENSOR	PAXVPS6102VNAM	1			
19	FITTING	PAXFPHF0814888	2			
18	SPEED_CON	PAXFESC0814888	2			
17	FITTING	PAXFEL08140888	2			
16	NIPPLE	PAXFBUVLM56888	1			
15	CYLINDER	PAXA3593301188	2			
14	ROT_BODY	M200HFA5013ZZ0	1			
13	JOINT	M200HFA5012ZZ0	2			
12	COLLAR	M200HFA5011ZZ0	2			
11	COLLAR	M200HFA5010ZZ0	2			
10	PIN	M200HFA5009ZZ0	1			
9	ROTATE_PIN	M200HFA5004ZZ0	1			
8	ROT_PLATE	M200HFA5003ZZ0	1			
7	BASE	M200HFA5001ZZ0	1			
6	PIN	M130HFA5009ZZ0	2			
5	PLATE	M130HFA5007ZZ0	1			
4	COLLAR	M130HFA5006ZZ0	1			
3	FIX_PIN_SET	M060HFA5100000	2			
2	CENTER_PIN	M060HFA5008ZZ0	2			
1	PIN	M035HAA5012ZZ0	2			

표면 거칠기		일반공차	
~	-	0~6	±0.1
▽	100S	7~30	±0.2
▽▽	25S	31~120	±0.3
▽▽▽	6.3S	121~400	±0.4
▽▽▽▽	0.8S	401~1000	±0.5

TITLE	NEXIA-V-2500S		PART NAME	Rotation Unit
A3	SCALE: 0.120	DESIGN	CHECK	APPROVE
UNIT : M/M		p.w.jang		
DATE : 07.10.10.				
DRAWING NO.	M200HFA5000000			

HYROBOTICS 한양로보틱스(주)

NO.	REVISIONS	DATE	APPROVE	REMARK
1				

6. Rotation Unit

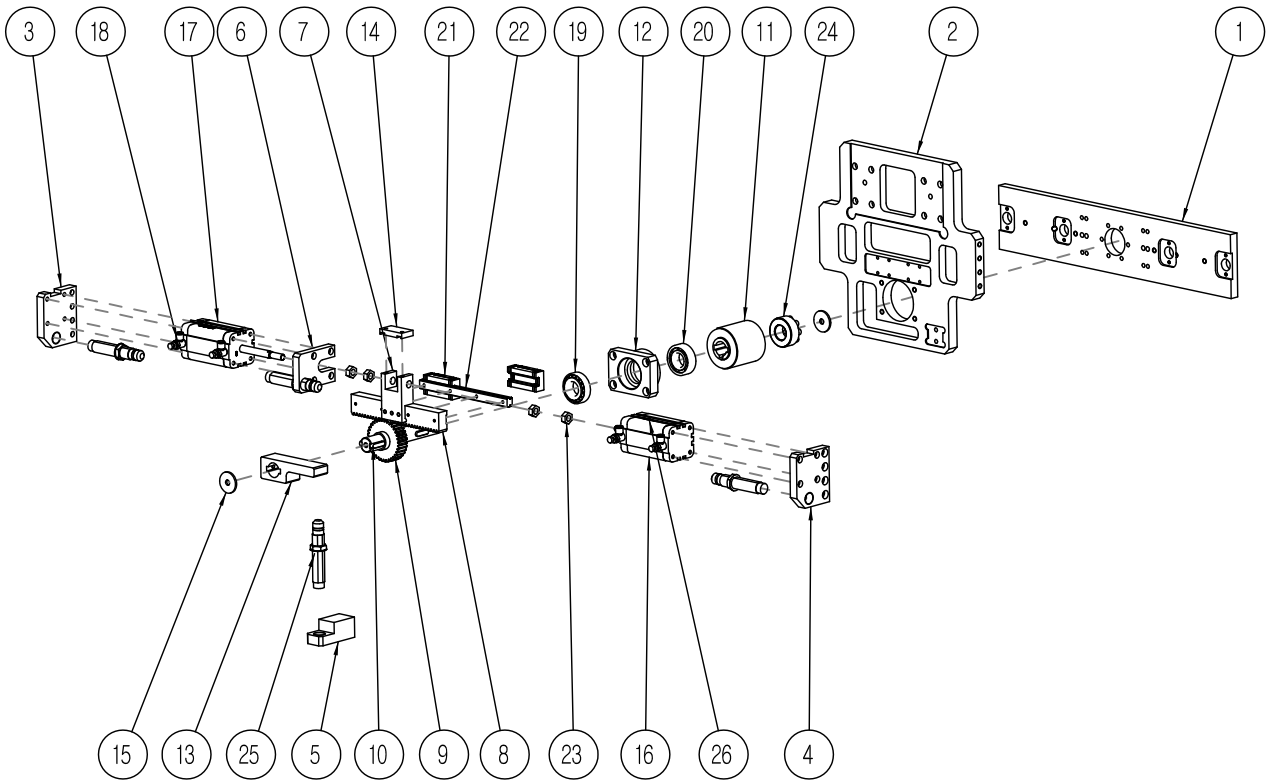

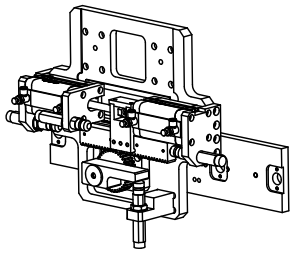

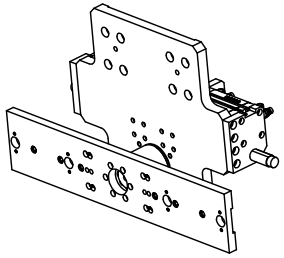

NO	DESCRIPTION	DRAWING NO	Q'TY	METERIAL	FINISH	REMARK
26	SENSOR	PSSSME8KLED248	2			
25	ABSORBER	PSAKIEM10305CT	4			
24	POWER_LOCK	PPLMMT25508888	1			
23	HEX_NUT	PNTHM010002ZC0	4			
22	LM_RAIL	PLMRLS150200L8	1			
21	LM-BLOCK	PLMBSAS15AL888	2			
20	BEARING	PBRA6205ZZ8888	1			
19	BEARING	PBRA3020588888	1			
18	FITTING	PAXFESC0618088	4			
17	AIR_CYLINDER	PAXAADVU4065K2	1			
16	AIR_CYLINDER	PAXAADVU4065K2	1			
15	WASHER	M200HFA6014ZZ0	2			
14	BLOCK	M200HFA6013ZZ0	1			
13	STOPPER	M200HFA6012ZZ0	1			
12	HOUSING	M200HFA6011ZZ0	1			
11	JOINT	M200HFA6010ZZ0	1			
10	KEY	M200HFA6009MC0	4			
9	GEAR_SHAFT	M200HFA6008ZZ0	1			
8	RACK_GEAR	M200HFA6007ZZ0	1			
7	CYL_JOINT	M200HFA6006ZZ0	1			
6	ABSORBER_BLOCK	M200HFA6005ZZ0	1			
5	ABSORBER_BLOCK	M200HFA6004ZZ0	1			
4	CYL_BRK2	M200HFA6003ZZ0	1			
3	CYL_BRK1	M200HFA6002ZZ0	1			
2	MAIN_PLATE	M200HFA6001ZZ0	1			
1	PLATE	M130HFA5007ZZ0_SSD	1			

표면 거칠기		일반공차	
~	-	0~6	±0.1
▽	100S	7~30	±0.2
▽▽	25S	31~120	±0.3
▽▽▽	6.3S	121~400	±0.4
▽▽▽▽	0.8S	401~1000	±0.5

TITLE	NEXIA-V-2500S			PART NAME	Rotation Unit
A3	SCALE: 0.110	DESIGN	CHECK	APPROVE	DRAWING NO.
UNIT : M/M		p.w.jang			M200HFA6000000
DATE : 07.10.10.					

HYROBOTICS 한양로보틱스(주)

HYROBOTICS Co., Ltd.
173-228 GAJWA-DONG SEO-GU INCHON KOREA
TEL:+ 82-32-582-5040
FAX:+ 82-32-584-7040

HYROBOTICS Corp.
5988 Mid Rivers Mall Dr. St.Louis MO 63303
TEL:+ 1-636-578-6059
FAX:+ 1-866-232-5594