NO.	REVISIONS	DATE	APPROVE	REMARK
1				

Movable Platen End of Arm Tooling Mount Drawing
* Before HYRobotics Quick Change System

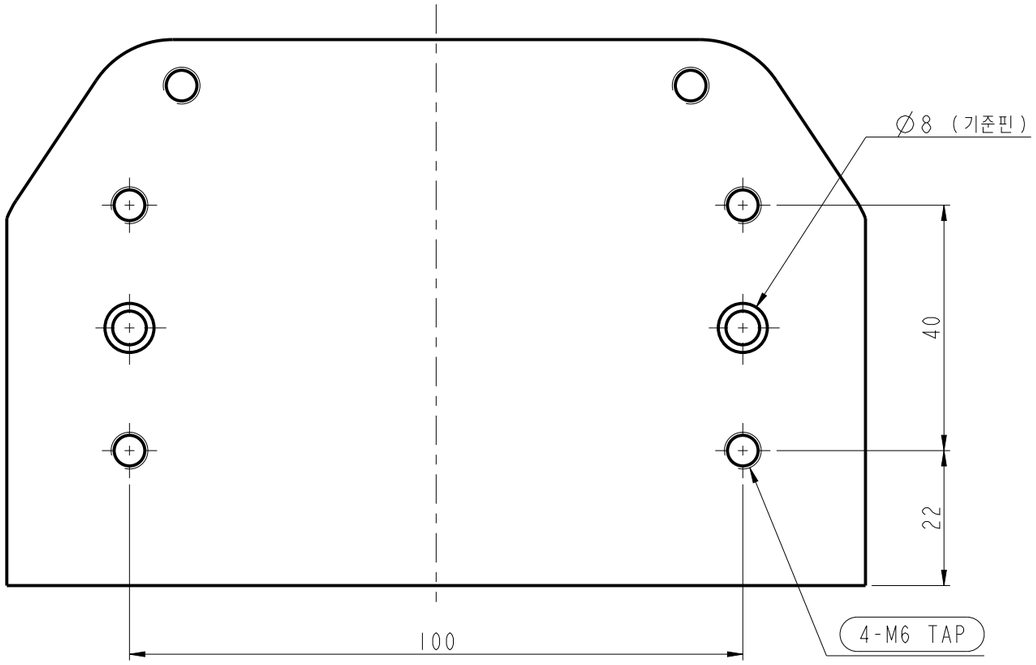

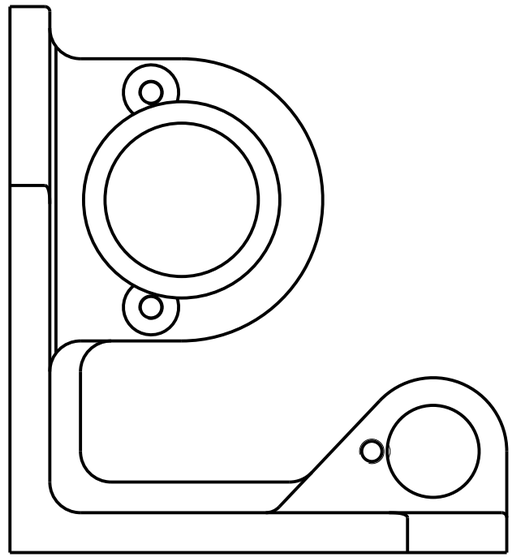

Fixed Platen End of Arm Tooling Mount Drawing

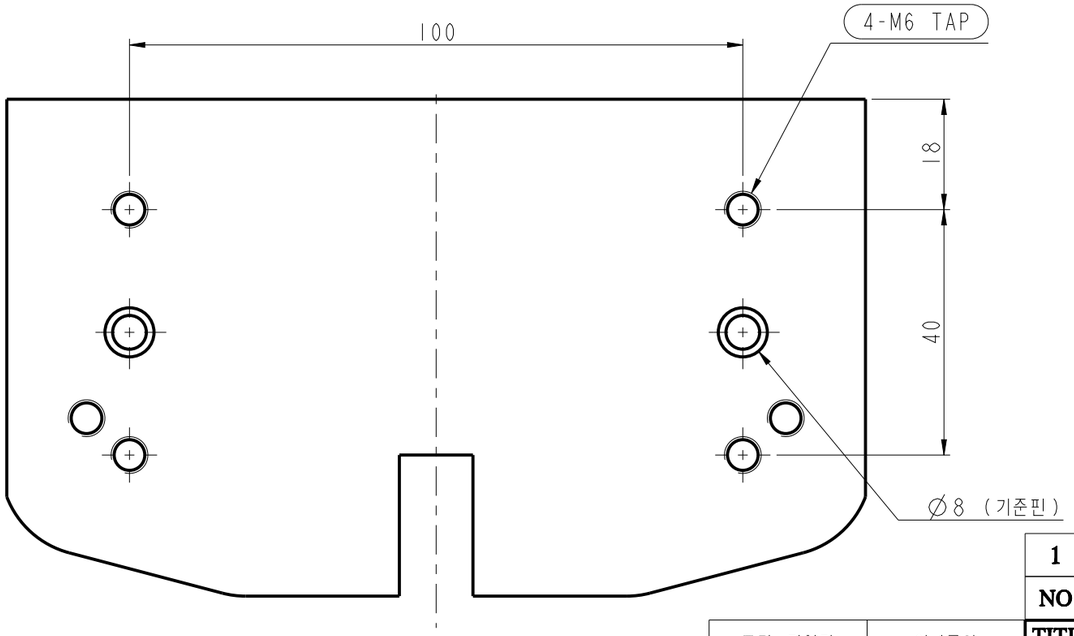

표면 거칠기		일반공차	
~	-	0~6	±0.1
▽	100S	7~30	±0.2
▽▽	25S	31~120	±0.3
▽▽▽	6.3S	121~400	±0.4
▽▽▽▽	0.8S	401~1000	±0.5

1		1	ALBC	.	소재사급
NO	DE	G NO	Q'TY	METERIAL	FINISH	REMARK

TITLE

PART NAME ROT_PLATE

A3 SCAL

CK APPROVE

DRAWING NO. M060HFA5003ZZ0

UNIT : M

DATE :

This drawing
without prop
managing de

copy of this drawing
technical-document

HYROBOTICS 한양로보틱스(주)